BERMODA GRASS 10 CM HEIGHT
FERTIELD SOIL 10 CM
COMPACTED SOIL 10 CM
2 LAYERS OF D.P.C LAYER 4CM
REINFORCED CONCRETE 20CM MIX 1:2:4
PLASTER 2CM MIX 1:6
FALSE CEILING FROM GYPSUM BOARD

CERAMIC TILES 40*40*0.5 CM
C.S. MORTER 2CM MIX 1:8
2 LAYERS OF D.P.C LAYER 4CM
REINFORCED CONCRETE 20CM MIX 1:2:4
PLASTER 2CM MIX 1:6
FALSE CEILING FROM GYPSUM BOARD

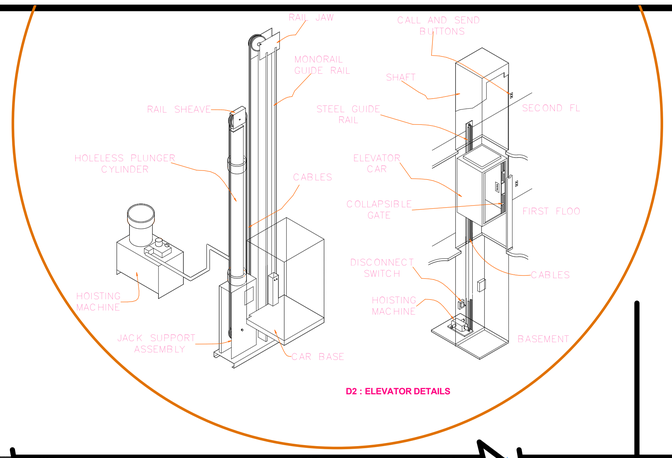

D2 : ELEVATOR DETAILS

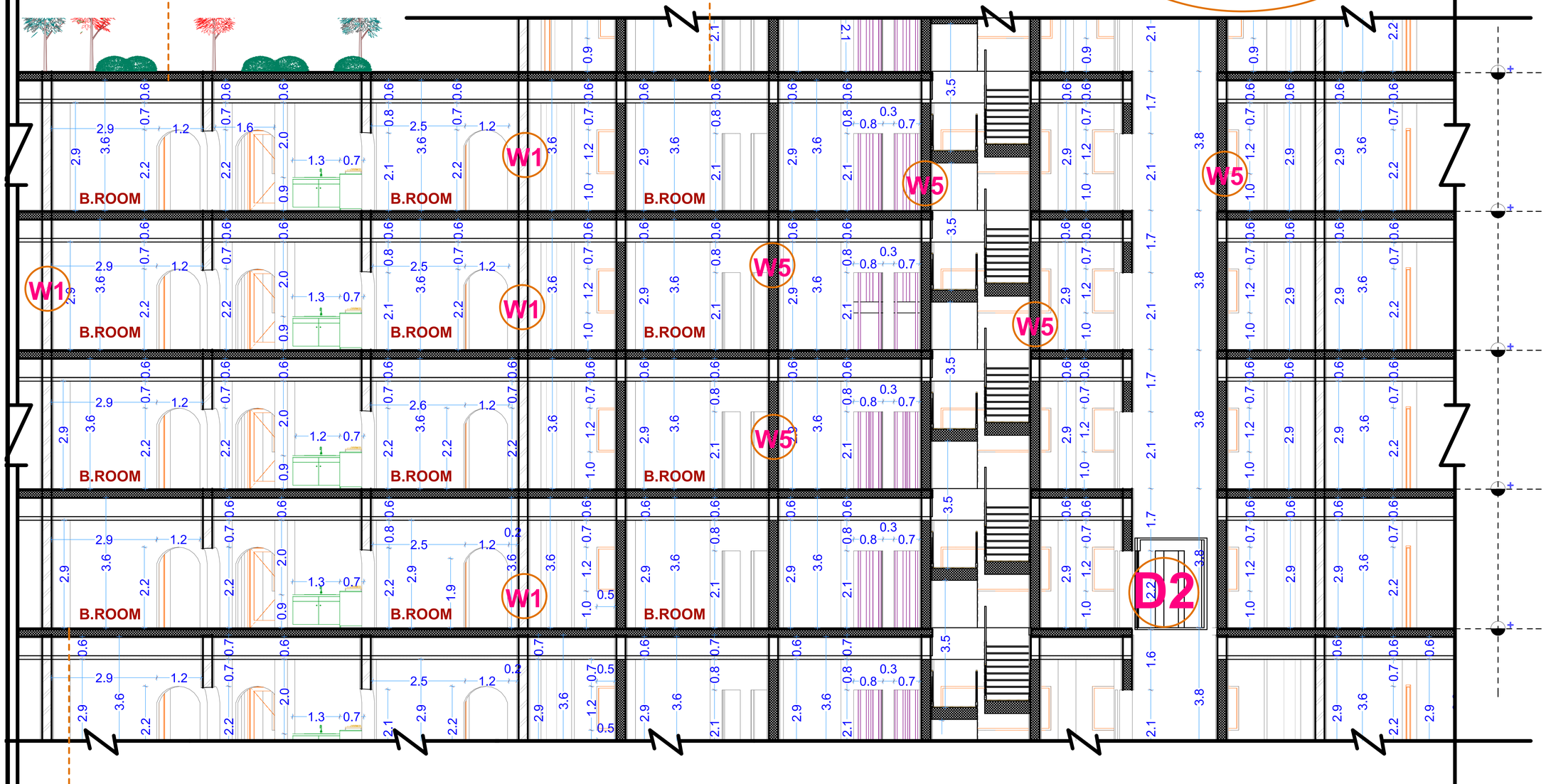

CERAMIC TILES 40*40*0.5 CM
C.S. MORTER 2CM MIX 1:8
2 LAYERS OF D.P.C LAYER 4CM
REINFORCED CONCRETE 20CM MIX 1:2:4
PLASTER 2CM MIX 1:6
FALSE CEILING FROM GYPSUM BOARD

PART SECTION

PLAIN SUITES

SCALE 1:50

N
W E
S

REMARKS:

FLOOR	F	C	CEILING
SKIRTING	S	W	WALL

FLOOR FINISHING :

F1 : B. ROOM FLOOR
CARPET + CERAMIC TILES 40*40*0.5 CM + C.S. MORTER 2CM MIX 1:8 + 2 LAYERS OF D.P.C LAYER 4CM + REINFORCED CONCRETE 20CM MIX 1:2:4 + PLASTER 2CM MIX 1:6 + FALSE CEILING FROM GYPSUM BOARD

F2 : HALL FLOOR
CERAMIC TILES 40*40*0.5 CM + C.S. MORTER 2CM MIX 1:8 + 2 LAYERS OF D.P.C LAYER 4CM + REINFORCED CONCRETE 20CM MIX 1:2:4 + PLASTER 2CM MIX 1:6 + FALSE CEILING FROM GYPSUM BOARD

F3 : PASSAGE FLOOR
BORCELEIN TILES 60*60*0.5 CM + C.S. MORTER 2CM MIX 1:8 + 2 LAYERS OF D.P.C LAYER 4CM + REINFORCED CONCRETE 20CM MIX 1:2:4 + PLASTER 2CM MIX 1:6 + FALSE CEILING FROM GYPSUM BOARD

WALL FINISHING :

W1 : B. ROOM & HALL INTERIOR WALL
BOMASTIC PAINTS 3 COATS BEIGE COLOR FROM ALMOHANDIS + PLASTER 2CM MIX 1:6 + RED BRICK WALL 25CM FIX BY C.S. MORTER 2CM MIX 1:8 + PLASTER 2CM MIX 1:6 + BOMASTIC PAINTS 3 COATS BEIGE COLOR FROM ALMOHANDIS

W2 : B. ROOM & HALL EXTERIOR WALL
BOMASTIC PAINTS 3 COATS BEIGE COLOR FROM ALMOHANDIS + PLASTER 2CM MIX 1:6 + RED BRICK WALL 25CM FIX BY C.S. MORTER 2CM MIX 1:8 + PLASTER 2CM MIX 1:6 + BOMASTIC PAINTS 3 COATS WHITE COLOR FROM ALMOHANDIS

W3 : BATH ROOM WALL
CERAMIC TILES 30*20*0.5 CM + C.S. MORTER 2CM MIX 1:8 + RED BRICK WALL 25CM FIX BY C.S. MORTER 2CM MIX 1:8 + PLASTER 2CM MIX 1:6 + BOMASTIC PAINTS 3 COATS BEIGE COLOR FROM ALMOHANDIS

W4 : W.C & KITCHEN WALL
CERAMIC TILES 30*20*0.5 CM + C.S. MORTER 2CM MIX 1:8 + RED BRICK WALL 25CM FIX BY C.S. MORTER 2CM MIX 1:8 + CERAMIC TILES 30*20*0.5 CM + C.S. MORTER 2CM MIX 1:8

W5 : SHEAR WALL & ELEVATOR WALL
BOMASTIC PAINTS 3 COATS BEIGE COLOR FROM ALMOHANDIS + PLASTER 2CM MIX 1:6 + RED BRICK WALL 25CM FIX BY C.S. MORTER 2CM MIX 1:8 + PLASTER 2CM MIX 1:6

SKIRTING FINISHING :

S1: CERAMIC TILES 4O*10* CM
S2: BORCEILEIN TILE 60*10* CM

KEY PLAN

SUDAN UNIVERSITY OF SCIENCES & TECHNOLOGY

COLLEGE OF ARCHITECURE & PLANNING

PROJECT : 5 STARS HOTEL	FIVE YEARS

NAME : Ragab Hmed Mohammed

PART SECTION

SCALE	1:50
DATE :	NO. PAGE
20.5.2014	5