CHAPTER ONE

INTRODUCTION

1.1 Introduction:

Electric power is transmitted by means of transmission lines, which deliver bulk power from generating stations to load centers and consumers. For electric power to get to the final consumers in proper form and quality, losses along the lines must be reduced to the barest minimum. The system consists of connected power plants, bulk transmission lines, substations, distribution lines, and customers. Power losses occur during the delivery of electricity along the transmission and distribution system. In general, the difference between what is produced and what is consumed constitutes transmission and distribution losses. The power system may be divided into two main components, namely, the transmission system and the distribution system. The transmission system operates at higher voltage levels to minimize power losses in long distance transmission, while the distribution system operates at lower voltage levels to provide safe delivery to the customer. Accurate knowledge of power losses on transmission lines and their minimization is a critical component for efficient flow of power in Transmission line. Power losses result in lower power availability to final consumers. Hence, adequate measures need to be taken to reduce power losses to the barest minimum. The reduction of losses in transmission is important because of its economic, A substantial amount of energy is lost in the Transmission and distribution systems which well known as Technical losses. Technical losses on power systems are primarily due to heat dissipation resulting from current passing through conductors and from magnetic losses in transformers. Technical

losses are due to current flowing in transmission lines and generate the following types of losses:

(i) Copper losses those are due to I^2R losses that are inherent in all inductors because of the resistance of conductors.

(ii) Dielectric losses that are losses that result from the heating effect on the dielectric material between conductors.

(iii) Induction and radiation losses that are produced by the electromagnetic fields surrounding conductors.

(iv) Corona losses, corona occurs on all types of transmission lines, but it becomes more noticeable at higher voltages (345 kV and higher). Under fair weather conditions,

1.2 Problems Statement:

The increase in power demand has forced the power system to operate closer to its stability limit. Transmission losses and line overloading have become challenging problems due to the strengthening of power system by various means. In addition, one of the major causes of transmission losses is the reactive power unbalancing which occurs in stressed condition of power system [1]. The ability of understanding the technical losses and reduce it lead to have a stable and Comfortable electricity at lower cost. In this project we will face fundamental problems, how to reduce technical losses to the minimum

As investment, cost of FACTS controllers is very high; these devices must be placed optimally in a power system.

1.3 Research Objectives:

The main objectives of this research are to investigate the methods of reduction the technical losses by new techniques. Moreover, apply these

methods in transmission line Marawi-Elmarkhiat as case study. The focuses primarily on technical losses reduction. Neplan Program was used to reduction these losses by new technique. Also developing new technologies to reduce energy losses on transmission lines.

1.4 Methodology

The optimal location for reactive power compensation for reduction losses is considering identified by the "weakest bus" of the system. The weakest bus of the system can be identified using UQ-curves for a given load condition, and is computed for all load buses, this index required determining load flow analysis in steady state .The bus with the highest sensitivity will be the most vulnerable bus in the system and hence this method helps in identifying the weak bus in the system which critical reactive power needs support. In order to get a rough estimate of reactive power support needed from SVC, at the weakest bus and the corresponding load margin for a given load and generation direction, a shunt compensator with no limit on reactive power was used at the weakest bus by NEPLAN program. The amount of reactive power generated at the maximum loading point from the shunt compensator was used as optimal size of SVC.

SVC implemented on Marwi-Markhiat Transmission line system and the simulation is carried out using NEPLAN software.

1.5 Thesis Layouts

In this research, the power system losses and mathematical equations that can be used to determine the technical losses was mentioned in chapter two. Flexible AC Transmission Systems (FACTS**),** StaticVar Compensator (SVC) and voltage stability are presented and discussed in chapter three. The results of simulations and technical losses for a real case study are presented and

discussed in chapter four. The conclusions and possible future work on this research are presented in chapter five.

CHAPTER TOW

Literature Review

2.1 Introduction:

Transmission line losses they include conductor loss , radiation loss , dielectric heating loss , coupling loss and corona Conductor losses ,It is because current flows through a transmission line and a line has a finite resistance there is an un-avoidable power loss. This is sometimes called conductor loss or conductor heating loss and is simply a power loss .To reduce conductor loss simply shorten the transmission line or use a larger diameter wire. Conductor loss depends somewhat on frequency because of a phenomenon called the skin effect. The skin effect is the tendency of an alternating electric current (AC) to distribute itself within a conductor so that the current density near the surface of the conductor is greater than that at its core. A substantial amount of energy is lost in the Transmission and distribution systems, which well known as Technical and Non-Technical losses.

2.2 Technical Losses:

Technical losses in power systems are naturally occurring losses, which are caused by actions internal to the power system and consist mainly of power dissipation in electrical system components such as transmission lines, power transformers and measurement systems. Technical losses can involve degrees of turbine efficiency in generation, together with substation, transformer, and line related losses. The most common examples of technical losses include the power dissipated in transmission lines and transformers due to their internal electrical resistance.

These losses are calculated based on the natural properties of components in the power system, which include resistance, reactance, capacitance, voltage, and current. Loads are not included in technical losses because they are actually intended to receive as much energy as possible. Technical losses include resistive losses in the primary feeders (I^2R), distribution transformer losses (resistive losses in windings and core losses), resistive losses in secondary networks, resistive losses in service drops, and losses in kWh metering. Technical losses result from equipment inefficiency, the inherent characteristics of the materials used in the lines and equipment, and the sizes of lines and equipment. The three major contributors are the current squared losses through a resistance, transformer excitation losses, and line and insulation corona or leakage losses.

The losses incurred in resistance materials can be reduced by adopting the following means:

i. Reducing the current

ii. Reducing the resistance and the impedance

iii. Minimizing voltage

Electrical power system losses can be computed using several formulas in consideration of pattern of generation and loads, by means of any of the following methods:

i. Computing transmission losses as I^2R

ii. by differential power loss method

iii. by computing line flows and line losses

iv. Analyzing system parameters

v. Load flow simulation

2.2.1 Technical losses calculation:

Technical losses will be simply calculated using load flow method of power System

(i) Load Flow Analysis (power flow solution):

Power flow studies, commonly known as load flow, are an important part of power system analysis. They are necessary for planning, economic scheduling, and control of an existing system as well as planning its future expansion.

The solution to the power flow problem begins with identifying the known and unknown variables in the system. The known and unknown variables are dependent on the type of bus. A bus without any generators connected to it is called a Load Bus. With one exception, a bus with at least one generator connected to it is called a Generator Bus. The exception is one arbitrarily selected bus that has a generator. This bus is referred to as the Slack Bus.

In the power flow problem, it is assumed that the real power and reactive power at each Load bus are known. For this reason, Load Buses are also known as PQ Buses. For Generator Buses, it is assumed that the real power generated and the voltage magnitude $|V|$ is known. For the Slack Bus, it is assumed that the voltage magnitude $|V|$ and voltage phase θ are known. Therefore, for each Load Bus, the voltage magnitude and angle are unknown and must be solved for; for each Generator Bus, the voltage angle must be solved for; there are no variables that must be solved for the Slack Bus. In a system with N buses and R generators, there are then $2(N-1)-(R-1)$ unknowns.

In order to solve for the $2(N-1)-(R-1)$ unknowns, there must be $2(N-1)-(R-1)$ equations that do not introduce any new unknown variables. The possible equations to use are power balance equations, which can be written

for real and reactive power for each bus. Equations included are the real and reactive power balance equations for each Load Bus and the real power balance equation for each Generator Bus. Only the real power balance equation is written for a Generator Bus because the net reactive power injected is not assumed to be known and therefore including the reactive power balance equation would result in an additional unknown variable. For similar reasons, there are no equations written for the Slack Bus.

(ii) Power Flow Equation:

Consider a typical bus of a power system network as shown in figure (2.1).

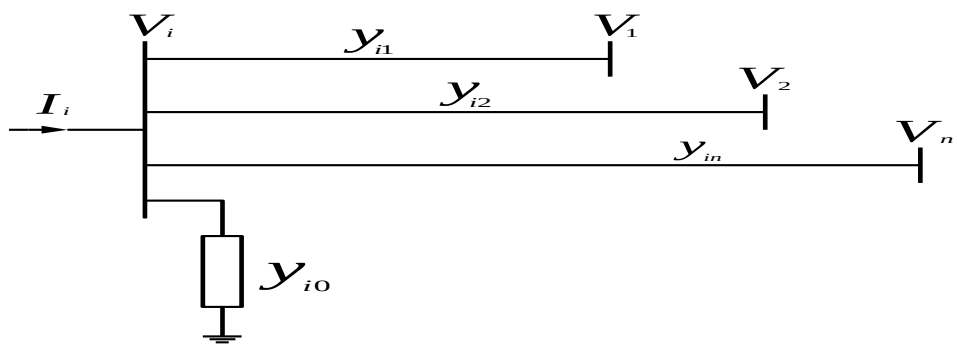

Figure (2-1) a typical bus of the power system

Transmission lines are represented by their equivalent π models where impedances have been converted to per unit admittances on a common MVA base. Application of KCL to this bus results in.

$$I_i = V_i \sum_{j=0}^{n} y_{ij} - \sum_{\substack{j=1 \\ j \neq i}}^{n} y_{ij} V_j \quad \ldots\ldots\ldots\ldots\ldots\ldots (2.2)$$

Where

V_i = voltage at bus i.

I_i= current for bus i.

V_j = voltage at bus j.

y_{ij} = per unit admittances between bus i and j.

The active and reactive power at bus i is

$$P_i + jQ_i = V_i I_i^* \quad \ldots\ldots\ldots\ldots\ldots\ldots\ldots\ldots\ldots \quad (2.3)$$

$$I_i = \frac{P_i - jQ_i}{V_i^*} \quad \ldots\ldots\ldots\ldots\ldots\ldots\ldots\ldots\ldots\ldots \quad (2.4)$$

Substituting for I_i in (2-4) yield

$$\frac{P_i - jQ_i}{V_i^*} = V_i \sum_{j=1}^{n} y_{ij} - \sum_{\substack{j=1 \\ j \neq i}} y_{ij} V_j \quad \ldots\ldots\ldots\ldots\ldots\ldots \quad (2.5)$$

From the above relation, the mathematical formulation of the power flow problem results in a system of algebraic nonlinear equations which must be solved by iterative techniques.

a. Gauss-seidel Power Flow Solution:

In the power flow study, it is necessary to solve the set of nonlinear equations represented by (2-4) for two unknown variables at each node, the equation (2-4) is solved for V_i , and the iterative sequence becomes

$$V_i^{(k+1)} = \frac{\dfrac{P_i^{sch} - jQ_i^{sch}}{V_i^{*(k)}} + \sum y_{ij} V_j^{(k)}}{y_{ij}} \quad \ldots\ldots\ldots\ldots\ldots\ldots\ldots\ldots \quad (2.6)$$

Where

P_i^{sch} And Q_i^{sch} are the net real and reactive powers expressed in per unit

y_{ij} Is actual admittance in per unit?

If (2-6) is solved for P_i and Q_i we have

$$P_i^{(k+1)} = R\left\{ V_i^{*(k)} \left[V_i^{(k)} \sum_{j=0}^{n} y_{ij} - \sum_{\substack{j=1 \\ j \neq i}} y_{ij} V_j^{(k)} \right] \right\} \quad \ldots\ldots\ldots\ldots\ldots \quad (2.7)$$

$$Q_i^{(k+1)} = I_m\left\{V_i^{*(k)}\left[V_i^{(k)}\sum_{j=0}^{n} y_{ij} - \sum_{\substack{j=1\\ j\neq i}} y_{ij}V_j^{(k)}\right]\right\} \quad \ldots\ldots\ldots\ldots\ldots\ldots (2.8)$$

The power flow equation is usually expressed in terms of the elements of the bus admittance matrix. Since the off-diagonal elements of the bus admittance matrix Y bus, shown by uppercase letters, are $Y_{ij} = -y_{ij}$, and the diagonal elements are $Y_{ii} = \sum y_{ij}$, equation (3-6) become

$$V_i^{(k+1)} = \frac{\dfrac{P_i^{sch} - jQ_i^{sch}}{V_i^{*(k)}} + \sum Y_{ij}V_j^{(k)}}{Y_{ij}} \quad \ldots\ldots\ldots\ldots (2.9)$$

And

$$P_i^{(k+1)} = R\left\{V_i^{*(k)}\left[V_i^{(k)}Y_{ii} + \sum_{\substack{j=1\\ j\neq i}} Y_{ij}V_j^{(k)}\right]\right\} \quad \ldots\ldots\ldots\ldots (2.10)$$

And

$$Q_i^{(k+1)} = I_m\left\{V_i^{*(k)}\left[V_i^{(k)}Y_{ii} + \sum_{\substack{j=1\\ j\neq i}} Y_{ij}V_j^{(k)}\right]\right\} \quad \ldots\ldots\ldots\ldots (2.11)$$

Y_{ii} Includes the admittance to ground of line charging susceptance and any other fixed admittance to ground. for the Gauss-Seidel method, an initial voltage estimate of 1.0 + j0.0 for unknown voltages is satisfactory, and the converged solution correlates with the actual operating states.

For P-Q buses, the real and reactive powers P_i^{sch} and Q_i^{sch} are known. Starting with an initial estimate, (2-9) is solved for the real and imaginary components of voltage. For the voltage-controlled buses (P-V buses) where P_i^{sch} and $|V_i|$ are specified, first (2-11) is solved for $Q_i^{(k+1)}$, and then is used in (2-9) to solve

for V_i^{k+1} . However, since $|V_i|$ is specified, only the imaginary part of V_i^{k+1} is retained, and its real part is selected in order to satisfy

$$\left(e_i^{k+1}\right)^2 = \sqrt{V_i^{\,2} - f_i^{\,k+1\,2}}$$

Where e_i^{k+1} and f_i^{k+1} are the real and imaginary components of the voltage V_i^{k+1}

- **Line flows and losses:**

After the iterative solution of bus voltages, the next step is the computation of line flows and line losses. Consider the line connecting the two buses i and j in Figure (2-2). [2].

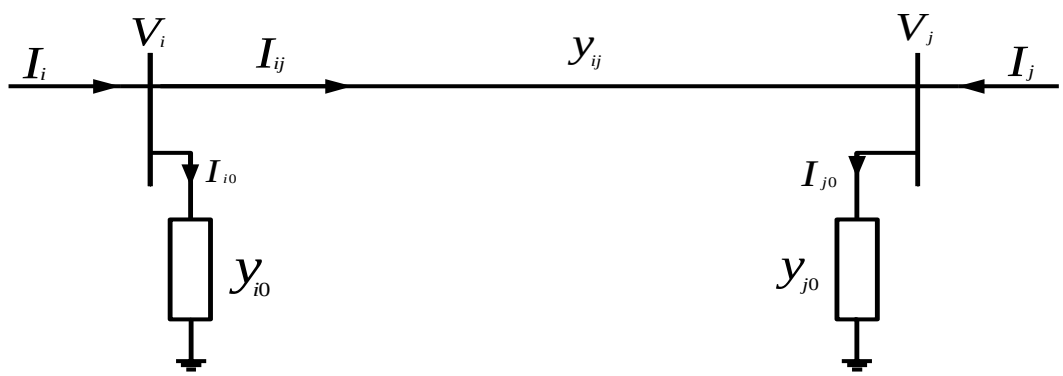

Figure (2-2) Transmission line model for calculating line flows

The current I_i measured at bus i is given by

$$I_i = I_{ij} + I_{i0} = y_{ij}\left(V_i - V_j\right) + y_{i0}V_i \quad \text{..... (2.12)}$$

Similarly, the current I_j measured at bus j is given by

$$I_j = -I_{ij} + I_{j0} = y_{ij}\left(V_j - V_i\right) + y_{j0}V_j \quad \text{..... (2.13)}$$

The complex powers S_{ij} from bus i to j and S_{ji} from bus j to i are:-

$$S_{ij} = V_i I_{ij}^{*} \quad \text{..... (2.14)}$$

$$S_{ji} = V_j I_{ji}^{*} \quad \text{..... (2.15)}$$

The power loss in line i ~ j is the algebraic sum of the power flows determined from (2-16) and (2-17), i.e...

$$Sl_{ij} = S_{ij} + S_{ji} \quad \text{.....} \quad (2.16)$$

2.3 Losses in a Transformer:

An ideal transformer is the one, which is 100% efficient. This means that the power supplied at the input terminal should be exactly equal to the power supplied at the output terminal, since efficiency can only be 100% if the output power is equal to the input power with zero energy losses. But in reality, nothing in this universe is ever ideal. Similarly, since the output power of a transformer is never exactly equal to the input power, due a number of electrical losses inside the core and windings of the transformer, so we never get to see a 100% efficient transformer. Transformer is a static device, i.e. we do not get to see any movements in its parts, so no mechanical losses exist in the transformer and only electrical losses are observed. So there are two primary types of electrical losses in the transformer. Copper losses and Iron losses. Other than these, some small amount of power losses in the form of 'stray losses' are also observed, which are produced due to the leakage of magnetic flux.

2.3.1 Copper losses:

These losses occur in the windings of the transformer when heat is dissipated due to the current passing through the windings and the internal resistance offered by the windings. So these are also known as ohmic losses or I^2R losses, where 'I' is the current passing through the windings and R is the internal resistance of the winding These losses are present both in the primary and secondary windings of the transformer and depend upon the load attached across the secondary windings since the current varies with the variation in

the load, so these are variable losses .Mathematically, these copper losses can be defined as:

$$Pohmic = IpRp + IsRs \ldots\ldots\ldots\ldots\ldots\ldots\ldots\ldots (2.17)$$

2.3.2 Iron losses:

These losses occur in the core of the transformer and are generated due to the variations in the flux. These losses depend upon the magnetic properties of the materials, which are present in the core, so they are also known as iron losses, as the core of the Transformer is made up of iron. And since they do not change like the load, so these losses are also constant, there are two types of Iron losses in the transformer:

2.3.2.1 Eddy Current losses:

When an alternating current is supplied to the primary windings of the transformer, it generates an alternating magnetic flux in the winding, which is then induced in the secondary winding also through Faraday's law of electromagnetic induction, and is then transferred to the externally connected load. During this process, the other conduction materials of which the core is composed of; also gets linked with this flux and an emf is induced. But this magnetic flux does not contribute anything towards the externally connected load or the output power and is dissipated in the form of heat energy. So such losses are called Eddy Current losses and are mathematically expressed as:

$$Pe = Ke\ f^2\ Kf^2\ Bm^2 \ldots\ldots\ldots\ldots\ldots\ldots\ldots\ldots (2.18)$$

Where:

Ke = Constant of Eddy Current

Kf^2 = Form Constant

Bm = Strength of Magnetic Field

2.3.2.2 Hysteresis losses:

Hysteresis loss is defined as the electrical energy, which is required to realign the domains of the ferromagnetic material which is present in the core of the transformer. These domains loose their alignment when an alternating current is supplied to the primary windings of the transformer and the emf is induced in the ferromagnetic material of the core, which disturbs the alignment of the domains, and afterwards they do not realign properly. For their proper realignment, some external energy supply, usually in the form of current is required. This extra energy is known as Hysteresis loss. These are the different kinds of losses happened to occur in transformer and an electrical engineer must take care of their losses and try to reduce them as low as possible. Transformer has two states of operations, one is without load and the other is with load. Most of these errors appear when the load is applied on the transformer.

2.4 Dielectric losses:

Dielectric losses result from the heating effect on the dielectric material between the conductors. Power from the source is used in heating the dielectric. The heat produced is dissipated into the surrounding medium. When there is no potential difference between two conductors, the atoms in the dielectric material between them are normal and the orbits of the electrons are circular. When there is a potential difference between two conductors, the orbits of the electrons change. The excessive negative charge on one conductor repels electrons on the dielectric toward the positive conductor and thus distorts the orbits of the electrons. A change in the path of electrons

requires more energy, introducing a power loss. The atomic structure of rubber is more difficult to distort than the structure of some other dielectric materials. The atoms of materials, such as polyethylene, distort easily. Therefore, polyethylene is often used as a dielectric because less power is consumed when its electron orbits are distorted.

2.5 Radiation and Induction Losses:

Radiation and Induction Losses are similar in that both are caused by the fields surrounding the conductors. Induction losses occur when the electromagnetic field about a conductor cuts through any nearby metallic object and a current is induced in that object. As a result, power is dissipated in the object and is lost. Radiation losses occur because some magnetic lines of force about a conductor do not return to the conductor when the cycle alternates. These lines of force are projected into space as radiation and this result in power losses. That is, power is supplied by the source, but is not available to the load.

2.6 Corona Losses:

Electric transmission lines can generate a small amount of sound energy as a result of corona. Corona is a phenomenon associated with all transmission lines. Under certain conditions, the localized electric field near energized components and conductors can produce a tiny electric discharge or corona that causes the surrounding air molecules to ionize, or undergo a slight localized change of electric charge. Utility companies try to reduce the amount of corona because in addition to the low levels of noise that result, corona is a power loss, and in extreme cases, it can damage system components over time. Corona occurs on all types of transmission lines, but it becomes more noticeable at higher voltages (345 kV and higher). Under fair weather

conditions, the audible noise from corona is minor and rarely noticed. During wet and humid conditions, water drops collect on the conductors and increase corona activity. Under these conditions, a crackling or humming sound may be heard in the immediate vicinity of the line. Corona results in a power loss. Power losses like corona result in operating inefficiencies and increase the cost of service for all ratepayers; a major concern in transmission line design is the reduction of losses.

2.6.1 Source of Corona:

- The amount of corona produced by a transmission line is a function of the voltage of the line, the diameter of the conductors, the locations of the conductors in relation to each other, the elevation of the line above sea level, the condition of the conductors and hardware, and the local weather conditions. Power flow does not affect the amount of corona produced by a transmission line.[3]
- The electric field gradient is greatest at the surface of the conductor. Large-diameter conductors have lower electric field gradients at the conductor surface and, hence, lower corona than smaller conductors, everything else being equal. The conductors chosen for the Calumet to the line were selected to have large diameters and to utilize a two-conductor bundle. This reduces the potential to create audible noise.
- Irregularities (such as nicks and scrapes on the conductor surface or sharp edges on suspension hardware) concentrate the electric field at these locations and thus increase the electric field gradient and the resulting corona at these spots. Similarly, foreign objects on the conductor surface, such as dust or insects, can cause irregularities on the surface that are a source for corona.

- Raindrops, snow, fog, hoarfrost, and condensation accumulated on the conductor surface are also sources of surface irregularities that can increase corona. During fair weather, the number of these condensed water droplets or ice crystals is usually small and the corona effect is also small.
- However, during wet weather, the number of these sources increases (for instance due to rain drops standing on the conductor) and corona effects are therefore greater.
- During wet or foul weather conditions, the conductor will produce the greatest amount of corona noise. However, during heavy rain the noise generated by the falling rain drops hitting the ground will typically be greater than the noise generated by corona and thus will mask the audible noise from the transmission line.
- Corona produced on a transmission line can be reduced by the design of the transmission line and the selection of hardware and conductors used for the construction of the line. For instance, the use of conductor hangers that have rounded rather than sharp edges and no protruding bolts with sharp edges will reduce corona. The conductors themselves can be made with larger diameters and handled so that they have smooth surfaces without nicks or burrs or scrapes in the conductor strands. The transmission lines proposed here are designed to reduce corona generation.

2.6.2 Corona Calculation:

The following corona calculations are from Dielectric Phenomena in High Voltage Engineering.

For Concentric Cylinders in Air:

Corona will not form when RO / RI < 2.718. (Arcing will occur instead when the voltage is too high.)

For Parallel Wires in Air:

Corona will not form when X / r < 5.85. (Arcing will occur instead when the voltage is too high.)

For Equal Spheres in Air:

Corona will not form when X / R < 2.04. (Arcing will occur instead when the voltage is too high.)

Arcing difficult to avoid when X / R < 8

Where:

- RO = Radius of outer concentric sphere
- RI = Radius of inner concentric sphere
- R = Sphere radius
- r = wire radius
- X = Distance between wires or between spheres

2.6.3 Ways to reduce corona loss in transmission lines:

Corona loss can be minimized by controlling the following factors:

2.6.3.1 Frequency of supply:

Corona loss increases as the supply frequency increases

2.6.3.2 Radius of the conductors:

Generally, corona loss increases on decreasing the radius of the conductor. In order to prevent this, bundled or hollow large diameter conductors must be used.

2.6.3.3 Distance between the conductors:

To prevent corona spacing between the conductors must be increased.

2.6.3.4 Air pressure

In hilly areas, the corona effect is more dominant due to reduced pressure.

2.6.3.5 Grading Rings:

is also an important factor that must be considered. The corona can be reduced by proper designing of the Insulator with the inclusion of grading rings and avoiding sharp edges, the effect of corona can be reduced but it cannot be eliminated completely as it is an integral function that comes

2.7 Non-Technical Losses:

Non-technical Losses (NTLs) refer to losses that occur independently of technical losses in power systems. NTLs are caused by actions external to the power system and also by the loads and conditions that technical losses computations fail to take into account. NTLs relate to the customer management process and can include a number of means of consciously

Defrauding the utility concerned. More specifically, NTLs mainly relate to power theft in one form or another and can also be viewed as undetected loads; customers' that the utilities don't know exist.

NTLs are more difficult to measure because they are often unaccounted by the system operators and thus have no recorded information. Two major sources which contribute to NTLs are: (i) component breakdowns and (ii) electricity theft. NTLs caused by equipment breakdown are quite rare, where factors may include equipment struck by lightning, equipment damaged over time, and the elements of neglecting equipment or performing no equipment maintenance. Even though equipment failure due to natural abuses like rain, snow and wind is rare, the equipment selected and the distribution infrastructure designed is in consideration with the local weather and natural phenomena.

Reducing NTLs is crucial for distribution companies, as these losses are concentrated in the LV network; their origins are spread along the whole

system and are most critical at lower levels in residential, smaller commercial and light industrial sectors. The most prominent forms of NTLs are electricity theft and non-payment, which are believed to account for most, if not all NTLs in power systems.

The information about the power sources and loads are needed to determine expected losses in power system using load- flow analysis software. The actual losses are the difference between outgoing energy recorded by source (e.g, at substation) and energy consumed by consumer, which is shown on the bills. The discrepancy between expected losses and actual losses would yield the extent of non-technical losses in that system. So firstly technical losses have been calculated using load flow studies. The most probable causes of non-technical losses (NTL) are**:-**

(i) Tempering with meters to ensure the meter recorded a lower consumption reading.

(ii) Errors in technical losses computation.

(iii) Tapping (hooking) on LV (low Voltage) lines.

(iv) Arranging false reading by bribing meter readers.

(v) Stealing by bypassing the meter or otherwise making illegal connections.

(vi) Fault energy meters or un-metered supply.

(vii) Errors and delay in meter reading and billing.

(viii) Non- payment by customer.

Other forms of NTLs may also exist, such as unanticipated increases in power system losses due to equipment deterioration over time, system miscalculations on the part of the utilities due to accounting errors or other information errors

CHAPTER THREE

Flexible AC Transmission Systems (FACTS)

3.1 Introduction

The concept of using solid-state power electronic converters for power flow control at transmission level has been known as FACTS. The idea has had some success in certain areas such as reactive power dispatch and control. However, the full use of FACTS for power flow control has had limited applications in part due to reliability concerns and in part due to availability of components. Perhaps the most salient consideration is the cost of these devices. A potential motivation for accelerated use of FACTS is the deregulation/ competitive environment in contemporary utility business. The potential ability of controlling the flow of electric power, and the ability to effectively join electric power networks that are not strongly interconnected, suggest that the FACTS may find new applications [4].

3.2 Types of Facts

The types of FACTS currently available can be categorized into devices that control certain electrical parameters. For example, the UPFC (Unified Power Flow Controller) can be used to control active and reactive line flows. The PAR (Phase Angle Regulator) can be used to control active power flow. Another type of FACTS, the STATCOM (STATic Compensator) is a shunt connected reactive power compensation device that is capable of generating or absorbing reactive power and in which the output can be varied to control the specific parameters of an electric power system. In general, the several types of existing and proposed FACTS devices can be categorized into three types termed A, B, and C for convenience.

3.3 Optimal allocation and sizing of FACTS devices

Having made the decision to install a FACTS device in the system, there are main issues that must be addressed: what type of device should be used, how much capacity should it have, and where in the system should it be placed. Assuming that the cost of a particular device is a function of its capacity, it would not be desirable to install a device that is overall larger for its intended purpose. For example, if the capacity of a series connected FACTS device is larger than the rating of the transmission line in which it will be installed would not be economic since the line limit would prohibit the device from being used to its full potential. Likewise, if the device is too small and it cannot handle as much power flow as the transmission line, the utility has effectively reduced the rating of the associated transmission line, keeping in mind the potential for later line upgrade. Like the discussion of where to place the FACTS device, the choice of which type of devices will have the highest impact in the desired effect. For instance, a type a device should be considered when reactive power control or voltage support is necessary. Type B devices may not perform well in lines with high reactive power flow. Also, the relative cost of the devices will have a considerable effect on which device is chosen. It is likely that the cost of adevice is inversely proportional to the maturity of the technology. This would indicate that the SVC, type A devices, is among the cheapest and the UPFC, type C devices, would be one of the more expensive. The decision of where to place a FACTS device is largely dependent on the desired effect and characteristics of the specific system. One possible method for determining the optimal location of the device is to simulate the operation of the device in all the possible locations of installation. However, this could be very time consuming specially for large systems.

Thus, some guidelines to identify places in the system are potential candidates for the FACTS controllers. Some of these guidelines are

3.4 FACTS applications for improving system stability

FACTS can be used for several power system performance enhancements, for example, TCSC can be used to improve the system transient rotor angle stability, damping of the power oscillations, and alleviation of SSR (Sub-Synchronous Resonance). However, SVC can be used to increase the system steady-state power transfer capacity, enhancement of the system transient rotor angle stability, and prevention of voltage instability. The effectiveness of the FACTS devices depends largely on their placement with the careful selection of control signals for achieving different functions.

3.5 Static VAr Compensator (SVC)

The Static VAr Compensator (SVC) is today considered a very mature technology. It has been used for reactive power compensation since the 1970s. An SVC is a shunt connected FACTS device whose output can be adjusted to exchange either capacitive or inductive currents to the connected system. This current is controlled to regulate specific parameters of the electrical power system (typically bus voltage) [5].

The thyristor has been an integral part in realizing the SVC and to enable control of its reactive power flow. It is used either as a switch or as a continuously controlled valve by controlling the firing angle. It should be noted that the SVC current will contain some harmonic content, something that needs attention in the design process [5].

3.5.1 Advantages of SVC

Advantages of SVC The main advantage of SVCs over simple mechanically

Advantages of SVC The main advantage of SVCs over simple mechanically switched compensation schemes is their near-instantaneous response to change in the system voltage. For this reason, they are often operated at close to their zero-point in order to maximize the reactive power correction. They are in general cheaper, higher capacity, faster, and more reliable than dynamic compensation schemes such as synchronous compensators (condensers). In a word [6]:

1. Improved system steady-state stability.
2. Improved system transient stability.
3. Better load division on parallel circuits.
4. Reduced voltage drops in load areas during severe disturbances.
5. Reduced transmission losses.
6. Better adjustment of line loadings.

3.5.2 SVC Components

This section presents the different "building blocks" that are commonly used when designing an SVC. The components are presented individually to describe their influence on the grid. We will also briefly discuss some of the problems associated with the components and how these could be handled. This is done to give some insight into how an SVC operates [5].

The different building blocks presented in this section are illustrated in figure 3.1.

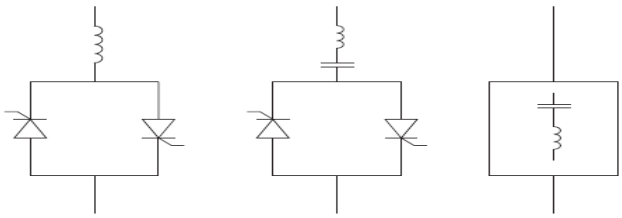

(a) TCR / TSR (b) TSC (c) Filter

Figure 3.1: One-line diagram of the common SVC components.

3.5.2.1 Thyristor Switched Capacitor

The thyristor switched capacitor (TSC) is a shunt connected capacitor that is switched ON or OFF using thyristor valves. Figure 3.1(b) shows the one-line diagram of this component. The reactor connected in series with the capacitor is a small inductance used to limit currents. This is done to limit the effects of switching the capacitance at a non-ideal time [5].

We assume that the TSC in figure 3.1(b) comprises the capacitance C, the inductance L and that a sinusoidal voltage is applied

$$v(t) = Vsin(\omega_o t) \quad \ldots\ldots\ldots\ldots\ldots\ldots\ldots\ldots\ldots\ldots\ldots\ldots\ldots\ldots (3.1)$$

Where ω_o is the nominal angular frequency of the system, i.e. $\omega_o = 2\pi f_o = 2\pi 50$ rad/s in a 50 Hz system.

The current through the TSC branch at any given time is determined by [5]:

$$i(t) = Icos(\omega_o t + \alpha) - Icos(\alpha)\cos(\omega_r t) + nB_c\left(V_{Co} - \frac{n^2}{n^2-1}Vsin(\alpha)\right)\sin(\omega_r t) \ldots . (3.2)$$

Where α is the thyristor firing angle, ω_r is the TSC resonant frequency, V_{Co} is the voltage across the capacitor at t = 0. The current amplitude I is determined by:

$$I = V\frac{B_C B_L}{B_C + B_L} \quad \ldots\ldots\ldots\ldots\ldots\ldots\ldots\ldots\ldots\ldots\ldots\ldots\ldots\ldots (3.3)$$

Where B_C is the capacitor susceptance and B_L is the reactor susceptance and n is given by:

$$n = \frac{1}{\sqrt{\omega_o^2 LC}} = \sqrt{\frac{X_C}{X_L}} \quad \ldots\ldots\ldots\ldots\ldots\ldots\ldots\ldots\ldots\ldots\ldots (3.4)$$

X_C and X_L above are the reactances of the capacitor and reactor. The TSC resonant frequency, ω_r, is defined by:

$$\omega_r = n\omega_o = \frac{1}{\sqrt{LC}} \quad \ldots\ldots\ldots\ldots\ldots\ldots\ldots\ldots\ldots\ldots\ldots\ldots\ldots (3.5)$$

The alternatively express the magnitude of the TSC current (3.3):

$$I = V\frac{B_C B_L}{B_C + B_L} = VB_C\frac{n^2}{n^2 - 1} \quad \ldots\ldots\ldots\ldots\ldots\ldots\ldots\ldots (3.6)$$

If it consider the steady-state case without a series connected reactor and note that the magnitude of the TSC current is determined by:

$$I = VB_C \quad \ldots\ldots\ldots\ldots\ldots\ldots\ldots\ldots\ldots\ldots\ldots\ldots\ldots\ldots (3.7)$$

Comparing (3.6) and (3.7) we notice that adding the reactor L amplifies the current by $n^2/(n^2 - 1)$. As n is determined by X_L and X_C, shown in (3.4), the L_C circuit have to be carefully designed to avoid resonance. This is normally done by keeping the inductor reactance X_L at 6% of X_C.

Careful design of the TSC can thus avoid a resonance with the connected grid. However, the oscillatory component of the current (3.2) is still something that has to be taken care of. The following section provides some insight into how these currents could be limited to a minimum [5].

3.5.2.2 Thyristor Switched Reactor

The thyristor switched reactor (TSR) is a shunt-connected reactor in series with a thyristor valve that is used to switch the reactor ON or OFF. A one line diagram of a TSR is shown in figure 3.1(a).

Basically, the TSR fulfills the same purpose as the shunt-connected mechanically switched reactor which has been employed in the AC transmission system since its early days. The only difference between these two components is that the former uses a thyristor to switch the reactor in and out of operation, while the latter uses a mechanical switch. Compared to the mechanical switch, the thyristor allows the switching process to be a lot faster [7]. Another advantage is that it will not face the same limitations on wear and tear as a mechanical switch, which is only capable of a finite number of

switches. The higher investment cost could possibly be earned by the reduction in service and maintenance costs of the mechanical switches.

As the switched reactor is not a common component in SVC installations, only this short description is provided for the sake of completeness. The controllable reactor is a much more useful and common component and this will be described in the following section [5].

3.5.2.3 Thyristor Controlled Reactor

The thyristor controlled reactor (TCR) can be represented by the same one-line diagram as for the previously mentioned TSR, shown in figure 3.1a. By enforcing partial conduction of the thyristor valve, the effective reactance of the inductor may be varied in a continuous manner [5].

This is achieved by controlling the firing angle α of the thyristor valve, thus controlling the TCR susceptance and its ability to absorb reactive power. As the firing angle can be varied continuously from zero to full conduction, the field of operation of the TCR is much greater compared to the discretely switched TSR [5].

The operation range of the firing angle lies between 90° and 180°, which respectively corresponds to full conduction and no conduction. Operating within the firing angle interval, $0^o \leq \alpha < 90^o$, introduces a DC offset to the reactor current which disturbs the thyristor valve [7]. Thus, this interval should be avoided.

We assume that a TCR branch with inductance L is connected to the AC voltage given by:

$$v(t)=V\sin(\omega_o t) \quad \text{.....} (3.7)$$

The voltage induces a current through the reactor described by the differential equation

$$v(t)=L\frac{di}{dt} \quad \text{.....} \quad (3.8)$$

Which, via integration, provides the expression of the TCR current

$$i(t)=\frac{1}{L}\int_{\alpha}^{\omega_o t} v(t)dt=\frac{1}{L}\int_{\alpha}^{\omega_o t} V\sin(\omega_o t)dt=-\frac{V}{\omega_o L}\cos(\omega_o t)+D \quad \text{... ... . .} \quad (3.9)$$

Where D is a constant of integration.

The two intervals of conduction for the thyristor valve are

$$\alpha < \omega_o t < 2\pi - \alpha \quad \text{.....} \quad (3.10a)$$

$$\pi + \alpha < \omega_o t < 3\pi - \alpha \quad \text{.....} \quad (3.10b)$$

where (3.10a) is the positive half period and (3.10b) is the negative.

We calculate the TCR current (3.9) by determining the integration constant D for the two intervals in (3.10), which gives us the following:

$$i(t) = \frac{V}{\omega_o L}(\cos(\alpha) - cos(\omega_o t)) \quad \text{... ... ...} \quad (3.11a)$$

$$i(t) = -\frac{V}{\omega_o L}(\cos(\alpha) + cos(\omega_o t)) \quad \text{... ... ...} \quad (3.11b)$$

Figure 3.2 shows the reactor current for three different firing angles. Full conduction is achieved at α = 90° and the reactor current decreases as α increases. This can easily be seen as currents corresponding to α = 90°, 120° and 150° are plotted together with the grid voltage *v* (*t*).

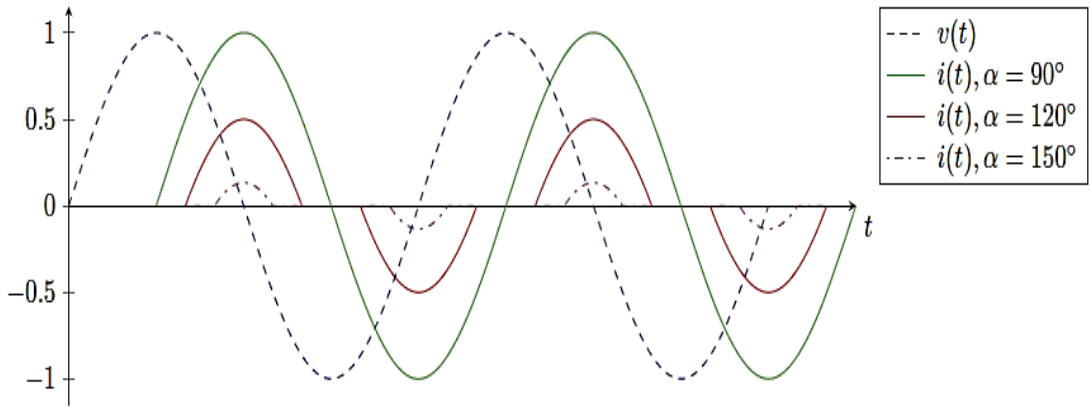

Figure 3.2: Current through the TCR for different firing angles α, with the applied voltage shown as the blue, dashed line.

3.5.3 Common SVC Topologies

The general SVC installation comprises two ranges of operation; inductive and capacitive. When designing the SVC we need to consider both the required control performance and cost of the potential components [5].

As the SVC is usually designed to be continuously operated, we would need a TCR in the installation. Adding a TCR will introduce harmonics to the SVC current. To minimize the injection of harmonics caused by the TCR, a filter network is usually included in the SVC installation [5].

In many SVC installations, a shunt connected fixed capacitance (FC) is used to inject reactive power to the grid as this would provide a cheaper solution. The fixed capacitance is usually partly or fully substituted by the filters used to dampen the TCR induced harmonics. Using this FC-type configuration would not need the expensive thyristor valves and could thus be equipped with a simpler control equipment [5].

Considering the FC-TCR type SVC, it can be noted that losses will increase as we increase the current through the TCR. Therefore, it is usually installed where the output is mostly capacitive as in e.g. industrial applications

for power factor control. Combining the TSC and TCR to make up the SVC would be a more advantageous approach for transmission system applications. This configuration makes it possible to minimize the losses by dividing the total capacitance into a number of thyristor switched capacitances. This allows us to minimize the current through the TCR and will thus minimize the losses [5].

To summarize, the most common topologies when designing SVC systems are [5]:

• Fixed capacitors & thyristor controlled reactor (FC-TCR)

• Thyristor switched capacitors & thyristor controlled reactor (TSC-TCR)

3.5.4 SVC V-I Characteristic

The SVC can be operated in two different modes: In voltage regulation mode and in var control mode (the SVC susceptance is kept constant) when the SVC is operated in voltage regulation mode, it implements the following V-I characteristic. As long as the SVC susceptance B stays within the maximum and minimum susceptance values imposed by the total reactive power of capacitor banks (B_{cmax}) and reactor banks (B_{lmax}), the voltage is regulated at the reference voltage V_{ref}. However, a voltage droop is normally used (usually between 1% and 4% at maximum reactive power output), and the V-I characteristic has the slope indicated in the Figure (3.3) The V-I characteristic is described by the following three equations [6]:

SVC is in regulation range $(-B_{cmax} < B < B_{Lmax})$ …… (3.12)

$$V = \frac{I}{Bc_{max}} \quad \ldots\ldots\ldots\ldots\ldots\ldots\ldots\ldots\ldots\ldots (3.13)$$

$$V = V_{ref} + X_s I \ldots\ldots\ldots\ldots\ldots\ldots\ldots\ldots\ldots\ldots\ldots\ldots (3.14)$$

SVC is fully inductive $(B = B_{Lmax})$

Where,

V = Positive sequence voltage (p.u.)

I = Reactive current (p.u./P_{base}) (I > 0 indicates an inductive current)

X_s = Slope or droop reactance (p.u./P_{base})

B_{Cmax} = Maximum capacitive susceptance (p.u./P_{base}) with all TSCs in service, no TSR or TCR

B_{Lmax} = Maximum inductive susceptance (p.u./P_{base}) with all TSRs in service or TCRs at full conduction, no TSC

P_{base} = Three-phase base power

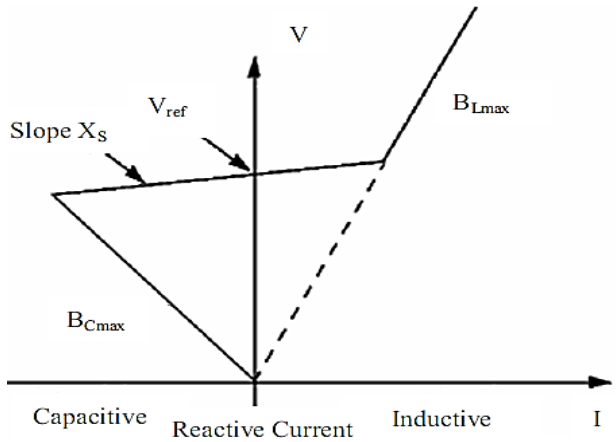

Figure 3.3: The V-I Characteristic Curve of SVC

3.5.5 Modelling of SVC

SVC is a Shunt FACTS device which is considered a variable impedance type device. The SVC uses conventional thyristors to achieve fast control of shunt-connected capacitors and reactors. The configuration of the SVC is shown in Figure (3.4), which consists of a fixed Capacitor (C) and a thyristor-controlled reactor (L). The firing angle control of the thyristor banks determines the equivalent shunt admittance presented to the power system [9].

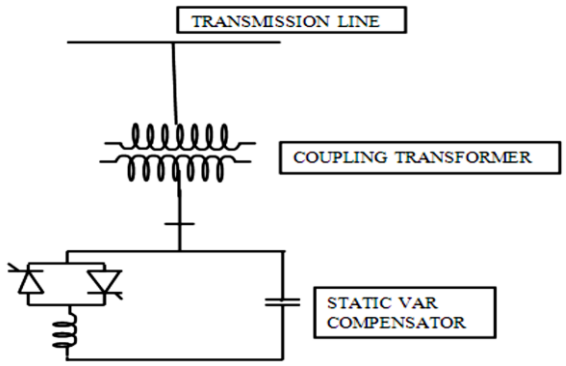

Figure 3.4: SVC connected to a transmission line

$$I_{SVC}=jB_{SVC}V_m \quad \ldots\ldots\ldots\ldots\ldots\ldots\ldots\ldots\ldots\ldots\ldots\ldots (3.15)$$

The reactive power injected at bus m is

$$Q_{SVC} = Q_m = I_{SVC}V_m = -V_m^2B_{SVC} \quad \ldots\ldots\ldots\ldots\ldots\ldots\ldots\ldots\ldots (3.16)$$

Where

$$B_{SVC} = \frac{1}{X_C X_L}\frac{X_L - X_C}{\pi}\left[2(\pi - \alpha_{svc}) + sin\alpha_{syc}\right] \ldots\ldots\ldots\ldots (3.17)$$

A Jacobian matrix that accounts for the SVC is given as

$$\begin{bmatrix} \Delta P_m \\ \Delta P_k \\ \Delta Q_m \\ \Delta Q_k \end{bmatrix} = \begin{bmatrix} \frac{\partial P_m}{\partial \delta_m} & \frac{\partial P_m}{\partial \delta_k} & 0 & V_k\frac{\partial P_m}{\partial V_K} \\ \frac{\partial P_k}{\partial \delta_m} & \frac{\partial P_k}{\partial \delta_k} & 0 & V_k\frac{\partial P_k}{\partial V_K} \\ \frac{\partial Q_m}{\partial \delta_m} & \frac{\partial Q_m}{\partial \delta_k} & \frac{\partial Q_m}{\partial \alpha_{svc}} & V_k\frac{\partial Q_m}{\partial V_K} \\ \frac{\partial Q_k}{\partial \delta_m} & \frac{\partial Q_k}{\partial \delta_k} & 0 & V_k\frac{\partial Q_n}{\partial V_K} \end{bmatrix} \begin{bmatrix} \Delta\delta_m \\ \Delta\delta_k \\ \Delta\alpha_{svc} \\ \frac{\Delta|V_k|}{|V_k|} \end{bmatrix} \ldots\ldots\ldots\ldots\ldots\ldots (3.18)$$

Where

$$\frac{\partial Q_m}{\partial \alpha_{svc}} = \frac{2V_k^2}{\pi X_L}\left[\cos(2\alpha_{svc}) - 1\right] \quad \ldots\ldots\ldots\ldots\ldots\ldots\ldots (3.19)$$

$\Delta\alpha_{svc}$ is found from inversion of the Jacobian matrix. The variable is then updated by

$$\alpha_{svc}{}^{n+1} = \alpha_{svc}{}^{n} + \Delta\alpha_{svc}{}^{n} \ldots\ldots\ldots\ldots\ldots\ldots\ldots\ldots\ldots\ldots\ldots..(3.20)$$

The control strategy of SVC is considered as

$$B_{SVC} = \begin{bmatrix} B_{svc}^{MAX}, if\omega \geq -\beta\omega_{max} & : during\ the\ first\ swing \\ K\omega, B_{svc}^{Min} \leq K\omega \leq B_{svc}^{MAX} & : IN\ Sub\ sequent\ swing \end{bmatrix}$$

Here ω_{max} is the maximum speed of the machine and it is usually at fault clearing and β is a small positive constant. K is a positive gain and its value depends on SVC rating [9].

3.5.6 Control Concept of SVC

An SVC is a controlled shunt susceptance (B) as defined by the SVC control settings that injects reactive power (Q) into the system based on the square of its terminal voltage. Figure (3.5) illustrates a TCR/FC SVC, including the operational concept. The control objective of the SVC is to maintain a desired voltage at the high-voltage bus. In the steady state, the SVC will provide some steady-state control of the voltage to maintain it the high-voltage bus at a pre-defined level [10].

If the high-voltage bus begins to fall below its set point range, the SVC will inject reactive power (Q_{net}) into the system (within its controlled limits), thereby increasing the bus voltage back to its desired voltage level. If bus voltage increases, the SVC will inject less (or TCR will absorb more) reactive power (within its controlled limits), and the result will be to achieve the desired bus voltage. From Figure (3.5), $+Q_{cap}$ is a fixed capacitance value, therefore the magnitude of reactive power injected into the system, Q_{net}, is controlled by the magnitude of $-Q_{ind}$ reactive power absorbed by the TCR[10].

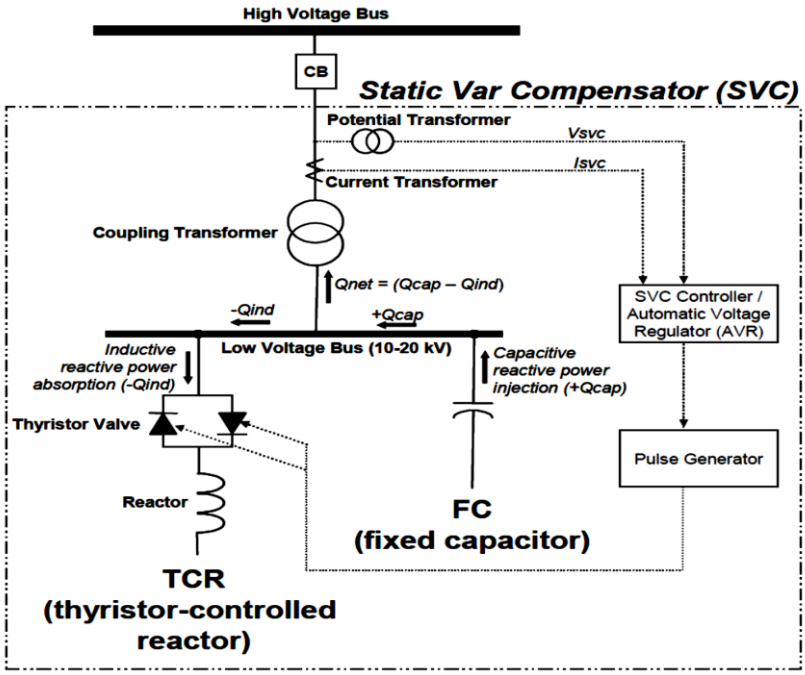

Figure 3.5: SVC with control concept briefly illustrated.

The fundamental operation of the thyristor valve that controls the TCR is described here. The thyristor is self-commutates at every current zero, therefore the current through the reactor is achieved by gating (or firing) the thyristor at a desired conduction angle (or firing angle) with respect to the voltage waveform. Figure (3.6) describes the relationship between the fundamental frequency TCR current and firing angle [10].

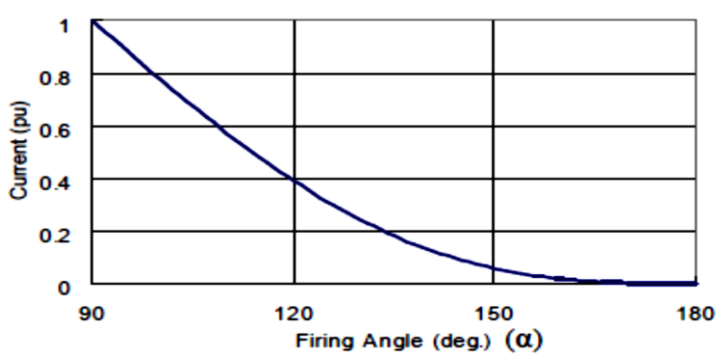

Figure 3.6: Illustration of the relationship between TCR current and firing angle.

Figure (3.7) further illustrates the thyristor valve operating characteristics of a thyristor controlled reactor. The firing pulses are approximately 10 μs. So it is concluded that as the firing angle increases above 90 degrees, the current in the TCR is reduced. Referring back to Figure (3.5), the "Pulse Generator" block after the AVR block utilizes the concepts discussed here and illustrated in Figures (3.6) and (3.7) to determine the firing angle for the thyristor valve controlling the reactor.

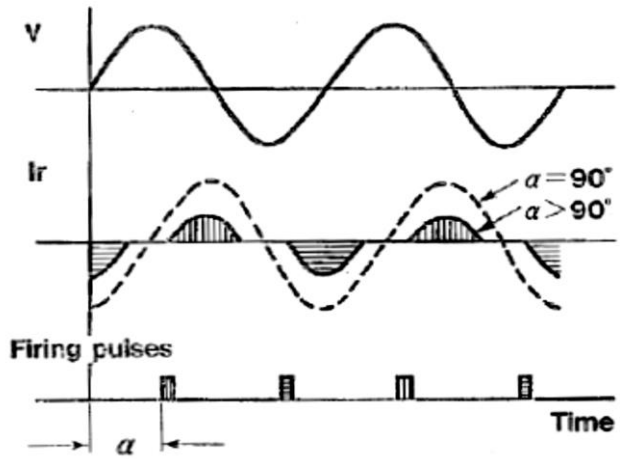

Figure 3.7: Illustration of the relationship between TCR current and firing angle (or conduction angle).

3.6 Voltage Stability

To ensure reliable operation, a power system has to be designed to withstand a large number of different disturbances. This is achieved by designing and operating the power system such that the most probable contingencies will not cause any loss of load, i.e. except at the direct connection to the equipment affected by the fault. It is especially important for the power system to be able to cope with the most severe contingencies without risking an uncontrolled spread of power interruptions (blackouts) [5].

Keeping the voltages within predefined intervals is challenging by the fact that most power systems are quite complex. Loads connected to the system

will vary over time, therefore the reactive power demand of the system will also vary. This will again lead to a variation of the voltage level as reactive power and voltage are closely coupled. Faults, disconnections and other contingencies also affect the demand of reactive power and voltage level in the system. It is crucial to keep a close eye on how the voltage level is varying throughout the power system and to make sure it is kept within the required limits. The goal is to have a power system that is “voltage stable" [5].

Voltage stability is defined as the ability of a power system to maintain steady state voltages at all buses in the system after being subjected to a disturbance from a given initial operating condition [5].

A power system would thus be characterized as unstable if a disturbance led to an uncontrollable drop in voltage. This unstable event is termed as a “voltage collapse” or “voltage instability”. The main cause of instability is the power systems lacking ability to meet the demand for reactive power. Hence, problems with voltage instability most often occurs in heavily stressed power systems [5].

3.6.1 Classification of Power System Stability

- Rotor angle stability is the ability of interconnected synchronous machines of a power system to remain in synchronism. Angle stability is associated with the balance between the mechanical torque of the generating units turbine and the electromagnetic torque of its generator [11].
- Frequency stability refers to the ability of the power system to maintain the system frequency within acceptable limits under normal operation or following a system disturbance. The condition to be met is the maintenance of the equilibrium between the active power injected into the system on one

hand, and the sum of the power absorbed by the loads and the system's active power losses on the other hand [11].

- Voltage stability refers to the ability of the power system to maintain voltages within acceptable limits at all buses of the system under normal operating conditions or after being subjected to a disturbance. The robustness of a system to voltage instability derives from the capability of the system to meet the reactive power demands at all buses across the network [11].

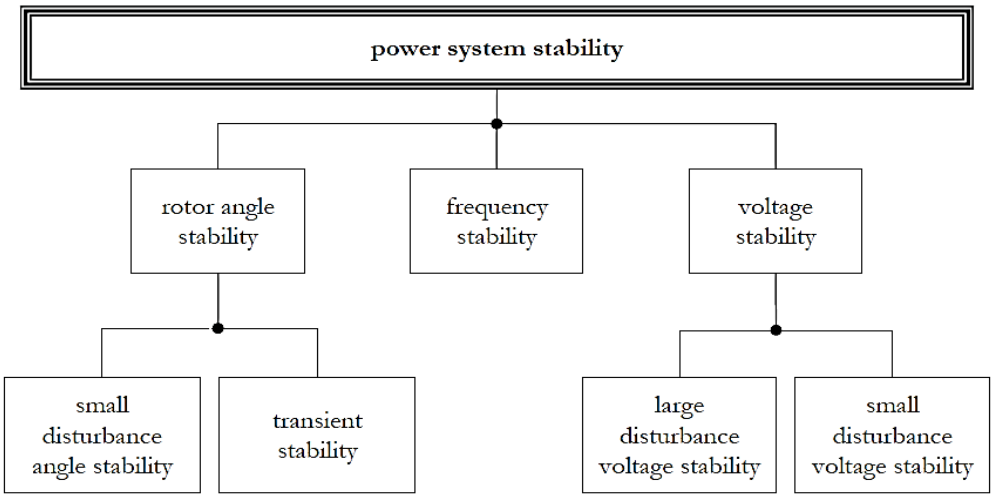

Figure 3.8: Classification of power system stability

3.6.2 Voltage Stability

Voltage stability can also called "load stability". A power system lacks the capability to transfer an infinite amount of electrical power to the loads. The main factor causing voltage instability is the inability of the power system to meet the demands for reactive power in the heavily stressed systems to keep desired voltages. Other factors contributing to voltage stability are the generator reactive power limits, the load characteristics, the characteristics of

the reactive power compensation devices and the action of the voltage control devices [12].

Voltage collapse typically occurs in a power system, which is heavily loaded, faulted and/or has reactive power shortages. Voltage collapse is a form of system instability that involves many power system components and their variables simultaneously. Voltage collapse often involves the entire power system, although it usually has a relatively larger involvement of one particular area of the power system [13].

3.6.3 Causes of Voltage Instability

There are several power system changes known to contribute to voltage instability or collapse. Some of these are cited below [13]:

- High reactive power consumption at heavy loads.
- Difference in transmission of reactive power under heavy loads.
- Generators, synchronous condensers or SVC reaching reactive power limits.
- Action of tap-changing transformers
- Load recovery dynamics
- Line tripping, generator outages and Occurrence of contingencies.
- Voltage sources are too far from load centers.
- Unsuitable locations of FACTS controllers.
- Poor coordination between multiple FACTS controllers.

3.6.4 Classification of Voltage Stability

For analysis purposes, voltage stability can be classified, in two ways: according to the time frame of their evolution (long-term or short-term voltage stability) or to the disturbance (large disturbance or small disturbance voltage stability) [9].

Large-disturbance voltage stability refers to the system's ability to maintain steady voltages following large disturbances such as system faults, loss of generation, or circuit contingencies. This ability is determined by the system and load characteristics, and the interactions of both continuous and discrete controls and protections. Determination of large-disturbance voltage stability requires the examination of the nonlinear response of the power system over a period of time sufficient to capture the performance and interactions of such devices as motors, under-load transformer tap changers, and generator field-current limiters. The study period of interest may extend from a few seconds to tens of minutes [9].

Small-disturbance voltage stability refers to the system's ability to maintain steady voltages when subjected to small perturbations such as incremental changes in system load. This form of stability is influenced by the characteristics of loads, continuous controls, and discrete controls at a given instant of time. This concept is useful in determining, at any instant, how the system voltages will respond to small system changes. With appropriate assumptions, system equations can be linearized for analysis thereby allowing computation of valuable sensitivity information useful in identifying factors influencing stability [9].

Therefore, voltage stability may be either a short-term or a long-term phenomenon:

• Short-term voltage stability involves dynamics of fast acting load components such as induction motors, electronically controlled loads, and HVDC converters. The study period of interest is in the order of several seconds, and analysis requires solution of appropriate system differential equations; this is similar to analysis of rotor angle stability. Dynamic modeling of loads is often essential. In contrast to angle stability, short circuits

near loads are important. It is recommended that the term transient voltage stability not be used [9].

• Long-term voltage stability involves slower acting equipment such as tap-changing transformers, thermostatically controlled loads, and generator current limiters. The study period of interest may extend to several or many minutes, and long-term simulations are required for analysis of system dynamic performance. Stability is usually determined by the resulting outage of equipment, rather than the severity of the initial disturbance [9].

3.6.5 Static voltage stability analysis techniques

Static voltage stability analysis techniques are based on the power flow formulation. The power flow formulation consists of the solution of a large set of nonlinear algebraic equations. The static analysis techniques are concerned with the following main aspects [13]:

• Determination of the stability of the given operating condition [13].

• The proximity of the given operating point to voltage instability [13].

• Identification of areas or buses to voltage instability (If the system is unstable) [13].

• In general, static voltage stability analysis provides answer regarding the margin and mechanism of voltage stability [13].

The common methods used for determination of the weakest point in power network in order to connect reactive power devices:

3.6.5.1 Continuation Power Flow

Continuation power flow is a static method, which is used to find a static voltage stability margin. It calculates a set of voltage values for all the loading conditions starting from the base case to the maximum loading case [13].

3.6.5.2 Modal Analysis

Modal or eigenvalue analysis of the system Jacobian matrix (J) near the point of collapse can be used to identify buses vulnerable to voltage collapse and locations, which are suitable for VAr injection [13].

3.6.5.3 Optimal Power Flow

The voltage stability analysis tools such as continuation power flow are based on concepts or techniques developed from bifurcation analysis of power system. Recent methods of VAr planning however use optimization-based formulation [11].

3.6.5.4 Contingency Analysis

Linear estimation method are used to approximate the values when more than one type of errors are encountered which lead to erroneous estimate in power system. The estimation errors [14].

3.6.5.5 Voltage stability indices

The purpose of voltage stability indices is to determine the point of voltage instability, the weakest bus in the system and the critical line referred to a bus. These indices are referred to either a bus or a line [14]:

i. P-V Curve

As the power transfer increases, the voltage at the receiving end decreases. Finally, the critical or nose point is reached. It is the point at which the system reactive power is out of use. The curve between the variation of bus voltages with loading factor (λ) is popularly called as P-V curve or 'Nose' curve. PV curves are used to determine the loading margin of the power system. The margin between the voltage collapse point and the current operating point is used as voltage stability criterion [14].

ii. Q-V Curve

With the help of Q-V curve, it is possible for the operators, to know the maximum reactive power that can be added to the bus before reaching minimum voltage limit. The MVAr distance from the operating point to the bottom of the Q-V curve is called as the reactive power margin. Q-V curve can be used as an index for voltage stability limit.

iii. V/ Vo Index

The ratio V/V_o at each bus shows the voltage stability map of the system. V is the bus voltage at certain load obtained from load flow study. Voltages V_o are obtained by solving load flow of the system at an identical state but with all the loads set to zero. This index allows immediate detection of weakest bus and corrective action can be taken to prevent the voltage instability [14].

iv. L-index

In order to become of practical value the indicator L has to be extended to the multi-node system, there are two categories of nodes which have to be distinguished. One is characterized by the behaviour of the PQ-node which stands for a type of consumer node, the other comprise the generator nodes which may be given by a PV-node or by the slack node.

3.6.6 Dynamic Voltage Stability Analysis Technique

Power systems are large dynamical systems with significant nonlinearities [15].

Therefore, the traditional methods of voltage stability investigation that are dependent on static analysis using the conventional power flow model cannot always capture these dynamics. Dynamic analysis is required for this purpose. The dynamic analysis includes linearized system analysis and time domain

analysis. The linearized analysis is used to study the nonlinear behavior such as bifurcations. The time domain analysis is used to study the impact of large disturbances and time evolution of various system state and control variables [12].but in this thesis is not included [12].

3.6.7 Methods of Improving Voltage Stability

While planning and operating power system the main objective of studying voltage stability is to increase the power transfer capability of the system by eliminating the voltage stability limits [16].

There are many aspects of voltage stability and solutions associated to the voltage stability in terms of generation, transmission and distribution. The objective is to find low cost solution whenever possible which requires special controls and effective power system operation methods. The main objective of power system engineer is to provide good quality of reliable supply [16].

3.6.7.1 Generation System

In order to improve power system voltage stability at the generation level we need to consider, planning control and protection and operation maintenance [16].

i. Planning

The reliability aspect of supply can be improved by sitting generating plants in load areas. The policy makers should advise the advantages of sitting power plants near the load centers as otherwise you need to have transmission systems, which reduces the reliability levels of the supply. However, environmental factors must also be kept in mind. For this gas turbines in load areas should encourage for fast start-up. This should normally be used for real power generation. As mentioned earlier specifying lower power factor generation, increase the fast acting reactive power reserves of the generators.

If generators normally operate near unity power factor, the reduced generator losses will reduce the life cycle cost increase of the larger (Higher MVA) lower p.f. machines [16].

Load tap changing (LTC) on step up generator transformer and auxiliary transformers have advantages for voltage stability as these transformers (LTC) allow the transmission side voltages to be maintained at the highest possible value without regard to terminal voltage of the alternator [16].

ii. Excitation System Control and Protection

In order to improve transient stability, high initial response and high ceiling excitation systems help induction motors reaccelerate after the fault. The generator high side voltage should be kept as possible by using line drop compensation or by outer control loop. The high voltage operation of transmission lines minimizes the increase in reactive power losses when ever a disturbance takes place. This is one of the most effective methods of improving the voltage stability. If fast changes in generation could counteract the fast changes in load, voltage stability can be insured. In attempting fast changes in generation, we effectively counteract the fast load restoration by tap changing and generator current limiting. The protection of alternator for voltage stability means the maloperation of alternator under minor abnormal conditions should be avoided [16].

iii. Operation

During peak load period, power import over the transmission network should be reduced; instead, demand should be met by using less economical sources like gas turbines within the load area. If there is loss of generation within the load, area spinning reserves should be available within the load area. The generation control should rapidly activate the spinning reserve [16].

It may sometimes be advantageous to reduce real power loading of alternators in load areas to allow higher reactive power loading and power should be rescheduled over lightly loaded lines. Reactive power loading of alternators should be closely monitored. The control operator should know the reactive power capability of generators. Shunt capacitor should be used to maintain fast acting reactive power reserves at generators [16].

3.6.7.2 Transmission System

It has already mentioned that the transmission lines should be designed for high thermal capacity, low loss and high surge impedance loadings double circuit EHV lines should be encouraged [16].

i. Reactive Power Compensation

Extra high voltage transmission line require shunt reactors for energisation and under lightly loaded conditions. These shunt switched off by the operator during voltage emergencies or by the under voltage relays. There are instances mentioned in literature when there have been voltage collapse because of not disconnecting the shunt reactors during voltage emergencies as these reactors further pull down the voltage resulting in voltage collapse. Mechanically switched shunt capacitor and SVC improve voltage stability.

The effectiveness of static VAr sources or capacitors can be justified if the post contingency condition can be tolerated for a short periods. However, if the post contingency condition is severe enough to cause immediate system problems such as motor stalling, fast active reactive compensation devices are required. Flexible AC transmission system (FACTS) devices are being used in power systems for this purpose [16].

ii. Controls

Automatic on-load tap changing on large EHV autotransformers can improve voltage stability. By regulating the voltage, the reactive power output of shunt

capacitors and the line charging increases which results in decrease in the reactive power losses. Tap changing at bulk power delivery substation and at distribution voltage regulators will not occur because of the faster regulation of high voltage system. Voltage sensitive load will, however, be restored faster and under voltage load shedding, will not be effective [16].

The tap changing will sag the EHV voltage, which can be compensated by capacitor bank insertion, by tripping the shunt reactors and control of EHV-side voltage at generators. It is possible even to prevent starting of longer-term voltage instability if remote signals are used for fast switching of shunt capacitors or shunt reactors following a disturbance [16].

Another control is automatic line reclosing whenever a short circuit is to be cleared. For transient stability, the reclosing is very fast. However, for slower form of voltage stability this does not need to be fast e.g. ten seconds delay allows time for electromechanical oscillation and generator torsional oscillations to die down. The longer delay provides better opportunity for successful reclosing as more time is available for arc deionization. Automatic reclosing should be faster than capacitor switching, tap changing or load shedding [16].

iii. Protective Relaying

A protective relay for overhead lines is expected to be operated whenever there is a short circuit on the line. However these relays have mal-operated even under overload conditions, thus causing black outs. The main culprit in this regard has been zone 3 impedance relay. With protective relaying provided on the system such as breaker failure relaying and bus protection locale back up, there is no need to use zone 3 relays. These should be done away with. On sub transmission lines over current relay instead of impedance relays, should be used [16].

3.6.7.3 Distribution and Load Systems

Voltage is basically load stability and effective solutions to voltage stability can be found at the problem source. Upgrading sub transmission and distribution circuits for energy conservation will help voltage stability by reducing feeder impedance. Use of higher voltage distribution circuit will improve voltage stability [16].

i. Capacitor Banks

Shunt capacitor banks should usually be located on the regulated side of LTC voltage regulators. The shunt capacitor banks thus act as constant reactive power sources. Control of voltage using switched shunt capacitors or series capacitors rather than LTC transformers and distribution voltage regulators, will improve voltage stability [16].

ii. Tap Changing

A simple but effective method to improve voltage stability is to prevent LTC transformer tap changing for low unregulated side (transmission side) voltage. This is most effective at substation serving high p.f. loads or high shunt compensated loads. If the load is at some distance from LTC transformer, tap changer blocking may not be desirable [16].

CHAPTER FOUR

SIMULATION AND RESULTS

4.1 Marwi-Markhiat Transmission Line

Transmission line Marwi-Markhiat-kabashi is used throughout the study. The transmission line which is commissioned between Marwi-Markhiat, double circuit by a length of 345 Km, type 4*325mm2ACSR-500KV and Markhiat-Kabashi, one circuit by a length of 36 km, type 4*325mm2ACSR-500KV. A single line diagram is depicted in Figure (4.1), the system consists of ten generators located at bus Marwi, including five transformers, there are three lines and three buses with tow loads totaling 970MW and 531 MVAr. Line data and bus data and all parameters are shown in appendix.

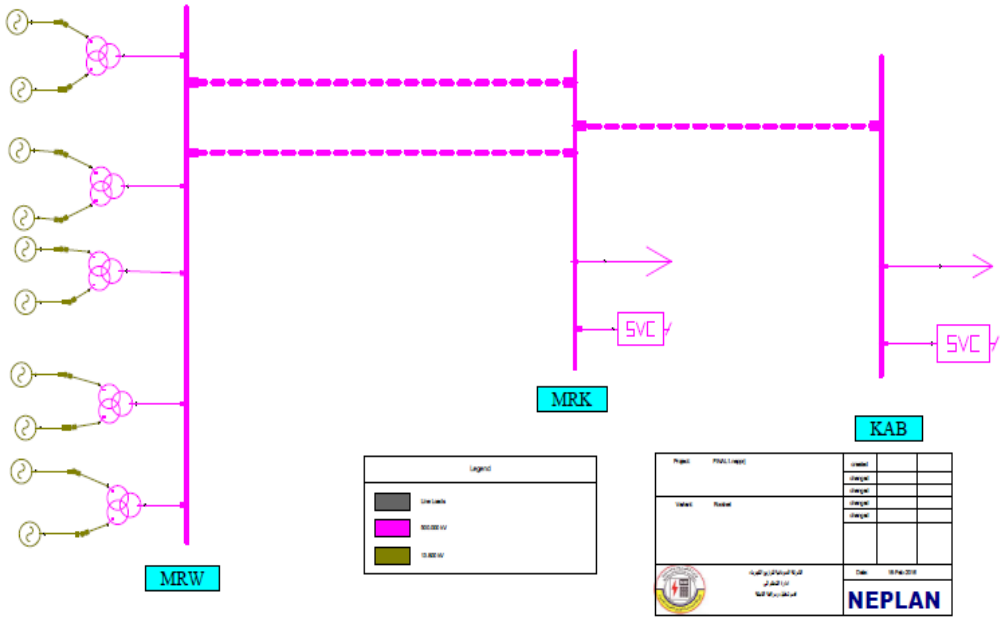

Figure 4.1: Single line diagram Marwi-Markhiat transmission line test system.

4.2 Power Flow Analysis

Power flow or load flow is the solution obtained for the power system under static (steady state) conditions of operation, the symmetrical steady state is, and Power Flow Solutions Method is mentioned as follow:

i. Gauss-Seidel method [2].
ii. Newton –Raphson method [2].
iii. Fast-Decoupled Load Flow Methods [2].
iv. DC Load Flow Analysis [17].

In this study Newton-Raphson, method was used to obtain the power-flow solution.

4.3 Normal Operation without SVC

The system is simulate in NEPLAN software environment using the operational data given in appendix. The network shows in fig (4.1) operated at normal condition with loading point (λ) equal 1.2. The total connected loads at system buses is 970 MW plus 531 Mvar. The recorded bus voltage is given in table (4.1). The recommended operational voltage Sudanese network is the nominal value ± 5%.

Table (4.1): Voltage magnitudes for Base case Without SVC

Bus NO.	**Before Placement of SVC**
	V_M (%)
Marwi	102.83
Markhiat	94.64
Kabashi	93.67

Table (4.1) shows voltage profile at all buses. It clear that buses voltages at markhiat and kabashi are out of recommended values.

The voltage stability enhancement by static var compensation SVC and must be chosen optimal size and location of these device

4.4 Optimal Size of SVC

The capacity of static var compensator (SVC) can be determined by shunt compensator with no limit on reactive power was used at weak bus at "normal load in this case λ =1.2 The amount of reactive power generated at the normal loading from the shunt compensator was found to be 83.101 MVar, but any increase in load ,small disturbance and fault the SVC cannot generate any of reactive power, so The amount of reactive power generated at the maximum loading point from the shnut compensator is optimum capacity and its found about 105 MVAr ,connected at Kabashi busbar .

4.5 Optimal location of SVC by Using UQ-curves

The optimal location of SVC to improvement of static voltage stability margin is by considering the identified “weakest bus” of the system. The weakest bus of the system is identified using the UQ-curves [13].for a given load condition, and is computed for all load buses. If the estimated value approaches, smaller reactive-power-margin refers the voltage collapse.the UQ-curves is displayed.As expected, the Kabashi Busbar has a smaller reactive-power-margin, because the sensitivity of this node is higher. Figure (4.2) Shows the weakest buses in system MARWI-MRKHIAT Results indicate that the Kabashi busbar has highest Sensitivity because smaller reactive power margen. Thus the Kabashi busbar is the weakest bus and is the optimal location for the reactive power support. Based on the studies carried out with the developed model the following are the results obtained based high sensitivity method.

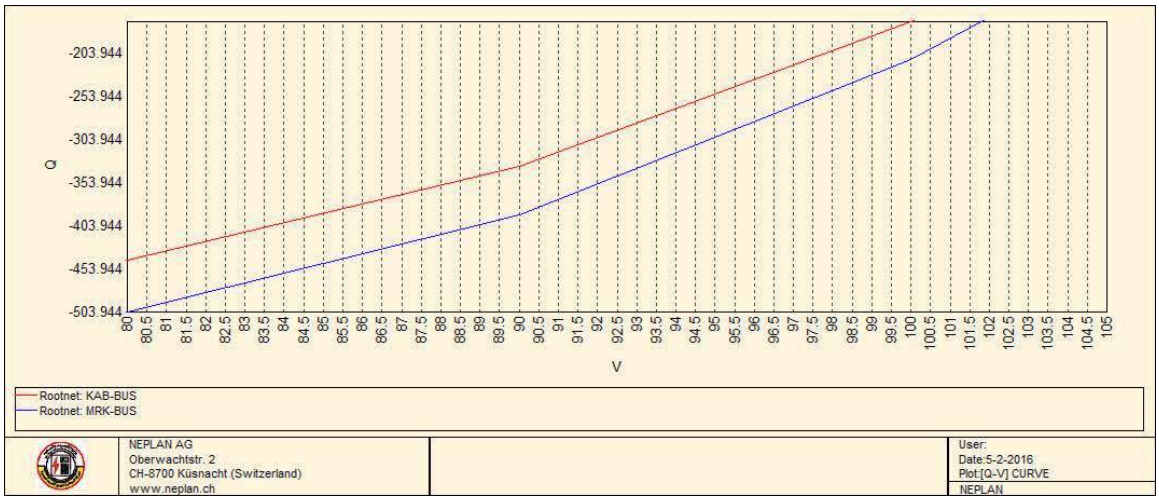

FIG (4.2) displayed UQ-curve

4.6 Normal System With SVC Connected to Kabashi bus

If SVC is connected to Kabashi busbar, the aim of control is to keep the voltage at that bus at 100 %, when it is near to the peak load condition i.e. for loading factor λ = 1.2 Here it is found that the SVC injects 83.101MVAR to Kabashi busbar in order to keep the voltage magnitude at 100 %.

Table (4.2) presents the voltage magnitude in percentage (%) for all buses of the system with SVC connected to Kabashi busbar.

Table (4.2): Voltage magnitudes after Placement of SVC at Kabashi busbar

Bus	**after Placement of SVC**
	V_M (%)
Marwi	105.02
Markhiat	99.58
Kabashi	99.00

Fig (4.3) shows the voltage profile when value of λ = 1.2 before placement of SVC as compared to the system after placement of SVC. It clearly shows that the use of SVC at the weakest bus - Kabashi busbar, the voltage profile is improved at all buses.

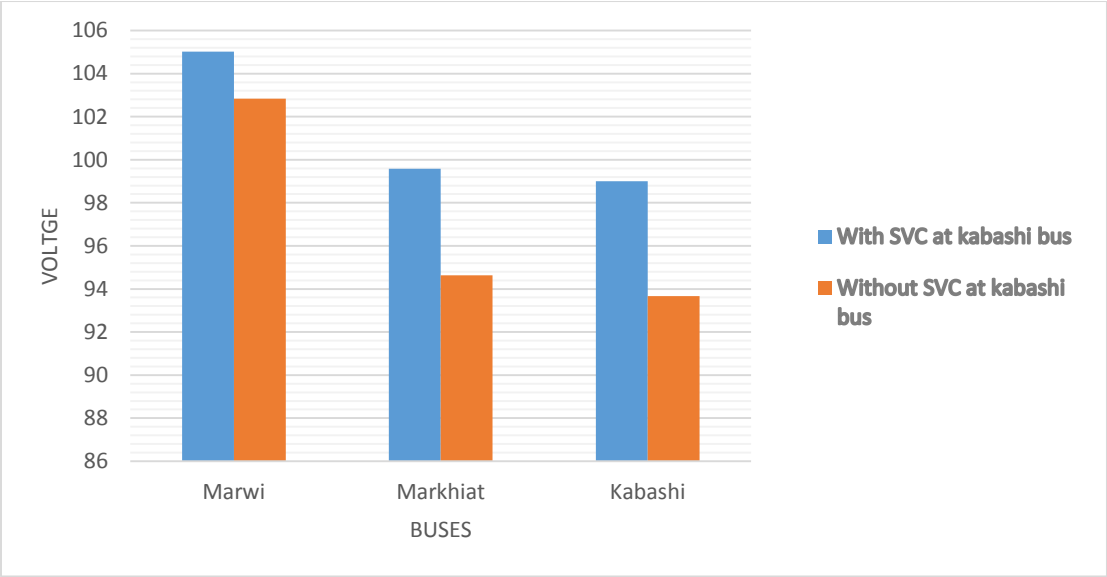

Fig 4.3 Voltage magnitude before & after Placement of SVC at Kabashi busbar

4.7 Normal System With SVC Connected To Markhiat busbar

If SVC is connected to markhiat busbar, the aim of control is to keep the voltage at these buses approx at 100%, when it is near to the peak load condition.

Table (4.3): Present theVoltage magnitude for bus of MARWI, MARKHIAT, KABASHE without and with SVC

Bus	after Placement of SVC at bus MARKHIAT	after Placement of SVC at bus KABASHI	after Placement of SVC at bus MARKHIAT,KABASHI	Injected SVC
	V_M (%)	V_M (%)	V_M (%)	MVAR
Marwi	105.02	105.02	106.33	0
Markhiat	99.58	99.58	100.87	84.296
Kapashi	98.66	99	100.04	83.101

SVC injected 78.201 MVAr to Kabashi busbar and 5.320 to Markhiat busbar in order to keep the voltage magnitude at 99.60 % when SVC is connected to bus Markhiat and Kabashi at the same time.

4.8 Active and Reactive Power Losses

Static var compensator (SVC) can be used to minimization of transmission losses.

Tables (4.4), (4.5), (4.6) respectively shows Active and Reactive Power Losses before & after Placement of SVC at Kabashi, Markhiat and Kabashi Markhiat together

From Bus	To Bus	Base case before Placement of SVC		after Placement of SVC at bus 14	
		P_{Loss} MW	Q_{Loss} MVar	P_{Loss} MW	Q_{Loss} MVar
MARWI	MARKHIAT 1	10.683	-240.786	9.2745	-279.704
MARWI	MARKHIAT 2	10.683	-240.786	9.2745	-279.704
MARKHIAT	KABASHI	0.651	6.380	0.479	4.681

Tables (4.4)

From Bus	To Bus	Base case before Placement of SVC		after Placement of SVC at bus 14	
		P Loss MW	Q Loss MVar	P Loss MW	Q Loss MVar
MARWI	MARKHIAT 1	10.683	-240.786	9.2755	-279.722
MARWI	MARKHIAT 2	10.683	-240.786	9.2755	-279.722
MARKHIAT	KABASHI	0.651	6.380	0.586	5.743

Table (4.5)

From Bus	To Bus	Base case before Placement of SVC		after Placement of SVC at bus 14	
		P Loss MW	Q Loss MVar	P Loss MW	Q Loss MVar
MARWI	MARKHIAT 1	10.683	-240.786	9.27	-279.854
MARWI	MARKHIAT 2	10.683	-240.786	9.27	-279.854
MARKHIAT	KABASHI	0.651	6.380	0.483	4.725

Tables (4.4)

SVC injects 83.101 MVAr to kabashi busbar in order to keep the voltage magnitude approx at 100 % when svc is connected to kabashi busbar and losses reduction from 22.017 to 19.02.

SVC injects 84.296 MVAr to markhiat busbar in order to keep the voltage magnitude approx at 100 % when svc is connected to markhiat busbar and losses reduction from 22.017 to 19.137.

SVC injects 83.521 MVAr to markhiat and kabashi busbar in order to keep the voltage magnitude approx at 100 % when svc is connected to markhiat and kabashi busbar at the same time and losses reduction from 22.017 to 19.023.

The results obtained had shown the improvement of voltage magnitude and losses reduction in almost all buses as compared to the system without any FACTS controllers, but the good losses reduction when SVC insert in kabashi busbar

the real power loss is reduced after placement of SVC in kabashi busbar from 22.017 MW to 19.02 MW and Reactive power loss is reduced from -475.194 MVAr to -554.727 MVAr.

CHAPTER FIVE

CONCLUSION AND RECOMMENDATIONS

5.1 Conclusion

In this research line losses are calculate and showing reduction analysis of losses using new facts technique static var compensator (SVC), when load current is increased, because power loss is depend upon current and resistance. When increase current, power loss is also increases and give poor voltage profile. To compensate this power loss, SVC is used .This system also shown single line diagram according to Transmission Electricity Company. Parameters are also taken from TEC. So, that this system is totally based upon real parameters, and give better output results. Line loss in this system is approx. 2.3%, with using STATIC VAR COMPENSATOR losses will reduced and it became 2%. V-Q indices technique is used to identify weakest bus in the system, high sensitivity is found at bus kabashi because smaller reactive power margen, therefore that is more suitable location for SVC. The SVC FACTS device is employed, voltage profile of the system is enhanced, and losses are reduced after using SVC. A shunt compensator with no limit on reactive power was used at the weakest bus in the system (kabashi busbar); the amount of reactive power generated at the maximum loading point from the shunt compensator that is optimum size and it's found about 105 MVAr

5.2 Recommendations

The recommended future work may be:

- Several types of FACTS devices can also implement into the system at the same time.
- Study and finding one or more location and size for the SVC when large fault occur.

- Using Genetic Algorithm (GA) and Particle Swarm Optimization (PSO) algorithm to find optimal location and size of SVC.

REFERENCES

[1] Sarita Bhole and Prateek Nigam “Improvement of Voltage Stability in Power System by Using SVC and STATCOM”, IJISET 2015

[2] Hadi Saadat," Power system analysis", McGraw-Hill companies, Singapora, 1990.

[3] Popkov, V. I. “Elektroperedacht sverkhvysokogo napriazheniia.” In Nauka I chelovechestvo (vol. 6), Moscow, 1967

[4] Ahmed Mustafa Mohammed Mohammed “Improving the Voltage Stability of Electrical Power Systems Using Shunt Facts Devices”, Master thesis, Cairo University November 2009.

[5] Oscar Skoglund “Dynamic voltage regulation using SVCs, A simulation study on the Swedish national grid”, Master thesis, KTH University 2013

[6] RAO, N.GAYATRI, P.BALAJI and K.SINDHU “Modeling and Simulation of Static VAR Compensator Controller for Improvement of Voltage Level in Transmission Lines”, International Journal of Electrical and Electronics Research, Vol. 3, Issue 1, pp. (281-288), Month: January - March 2015

[7] C. L. Wadhwa “Electrical Power Systems”, Book, Fourth Edition

[8] Nang Sabai, Hnin Nandar Maung, and Thida Win “Voltage Control and Dynamic Performance of Power Transmission System Using Static Var Compensator”, World Academy of Science, Engineering and Technology 42 2008

[9] V. Ganesh, K. Vasu, K. Venkata Rami Reddy, M. Surendranath Reddy and T.Gowri Manohar “Improvement Of Transient Stability Through SVC”, IJAET Nov. 2012

[10] Daniel J. Sullivan “Improvements in Voltage Control and Dynamic Performance of Power Transmission Systems Using Static Var Compensators (SVC)”, Master thesis, Pennsylvania State University 1995

[11] Prabha Kundur, “Definition and Classification of Power System Stability”, IEEE 2004

[12] Sami Repo “On-line Voltage Stability Assessment of Power System an Approach of Black-box Modelling”, Master thesis, Tampere University of Technology 2001

[13] Bishnu Prasad Sapkota “Voltage Stability Assessment and Enhancement of a Large Power System Using Static and Dynamic Approaches”, PHD thesis, Arizona State University May 2010

[14] A. R. Phadke, S. K. Bansal and K. R. Niazi “A Comparison of Voltage Stability Indices for Placing Shunt FACTS Controllers”, IEEE 2008

[15] Ahmed Salloum “Optimal Location and Sizing of Dynamic VArs for Fast Voltage Collapse”, Master thesis, RIZONA STATE UNIVERSITY May 2011.

[16] C. L. Wadhwa “Electrical Power Systems”, Book, Fourth Edition

[17] Jan Veleba “Steady State Solution of Electric Power Systems with Accent on Fault Modelling”, PHD thesis, Faculty of Electrical Engineering Pilsen, 2013

APPENDIX

Generator:

Name	Sr MVA	Ur kv	PUr %	cosphi	Xd sat %	xd'sat %	xd''sat %	X(2)%	X(0)%	Ufmax/ur	Ikk kA
GEN	125	13.8	0	0.9	88.3	27.5	18	19.6	15.2	1.3	0

Name	mue	RG	Turbo	Amort winding	Unit Generator	Motor	LF-Type	P operMW	Q oper Mvar
GEN	0	0			10	0	SL	100	80

LINE:

Name	Length km	Units	R (1) Ohm/..	X (1) Ohm/..	C (1) uF/...	G(1)
Marwi-Mrkhiat 1	345	Ohm/km	0.028	0.276	0.013079	0
Marwi-Mrkhiat 2	345	Ohm/km	0.028	0.276	0.013079	0
Mrkhiat-Kabashi	36.8	Ohm/km	0.03	0.276	1.3083e-005	0

Name	R (0) Ohm/..	X (0) Ohm/..	C(0)	Ir min A	Ir max A	redfact	Q mm2 mm2
Marwi-Mrkhiat 1	0.3445	0.981	0.00989943746031589	0	2890	1	0
Marwi-Mrkhiat 2	0.3445	0.981	0.00989943746031589	0	2890	1	0
Mrkhiat-Kabashi	0.3445	0981	9.98999980603404e-006	0	2503	1	0

LOAD:

Name	LF Type	P	Q	Domestic Unit	Units
Markhiat load	PQ	650	341	0	HV
Kabashi Load	PQ	320	190	0	HV

Transformer: all transformer at the same value:

Name	Vector Group	Unit Transf	Comp Wind	Sr MVA	Ur1 KV	Ur2 KV	uKr(1) %	uRr(1) %	uKr(0) %	uRr (0) %
TR MRW	YNyn0d5	0	0	282	525	13.8	24.22	0	24.22	0

Name	I0 %	Pfe kw	U01 (0) %	U02 (0)%	Earth prim	RE1 ohm	XE1 ohm	ZE1 active %	Earth second	RE2 ohm	XE2 ohm	ZE2 active %
TR MRW	0	0	0	0	direct	0	0	100	direct	0	0	100

Name	On-load tap	Tap side	Controlled bus	Tap act	Tap min	Tapr	Tap max	Delta U %	Beta U	Uset %	P set	Sr min MVA	Sr max MVA
TR MRW	0	primary	primary	3	1	5	12	-2.5	0	100	0	125	125