4.1 System design

Aerospace coatings have come a long way, from providing basic corrosion prevention to meeting the ever-increasing customer demand for high gloss mirror finishes and technically advanced military coatings.

As coatings become more complex, so do the requirements that must be met during application – if the resulting product is to perform as engineered. It is critical to control the environment in which the aircraft are prepared, coated and cured in order to achieve a high-quality finish.

This Automated Painting hanger is a system conceptually designed according to the Mechatronics System Design Model as shown below:

4.2 Design objectives and specifications:

Design an automated painting workshop hanger to satisfy the following:

1- Automated system with less human interface after running the system.
2- Adjusting the height and distance of holding arm (all directions).
3- Dividing the aircraft into sections (upper, lower, left side, right side, wings, vertical stabilizer).
4- Design the holding plates containing two spray guns.
5- Using object detector (sensor) .
6- Automatic vacuum fan control at the same time with the painting system.

System Description:

1- The system based on minimum human interaction to the painting process activities, the two object sensors in the painting plate provide a signal when detecting the aircraft body which change the contact switch in the ladder diagram from normal open to normal close.
2- The initiation of the system will be start from limit switch **S1**, then a signal move to the vertical motor to move left, when it reached switch **S2** a signal send to the vertical motor to move down to switch 3, after reaching switch **S3** a signal sent to the horizontal motor with a negative sign to return the plate from left to right to switch **S4**, then another negative signal moved to vertical motor to back the plate up to the initial position S1.

3- The proximity sensor continually detect the distance from the painting plate to aircraft surface , and send either positive signal to the motor in the holding arm to move out far when the distance more the (8-10) inches , and sent a negative signal to the motor to get closer hen the distance is less than 8-10) inches.

4- The spray gun motor will be operated when the required signal sent through designated contactors according to the ladder diagram below , and start painting.

4.3 Conceptual Design Elements:

Considering the above requirements the automated painting system should convoy the relevant equipments and devices, then for easier design configuration the system is decomposed into two parts:

1- The painting plate with two spray guns.

2- The Holding Arm Mechanism.

4.3.1 MDQ Prototype The painting Plate:

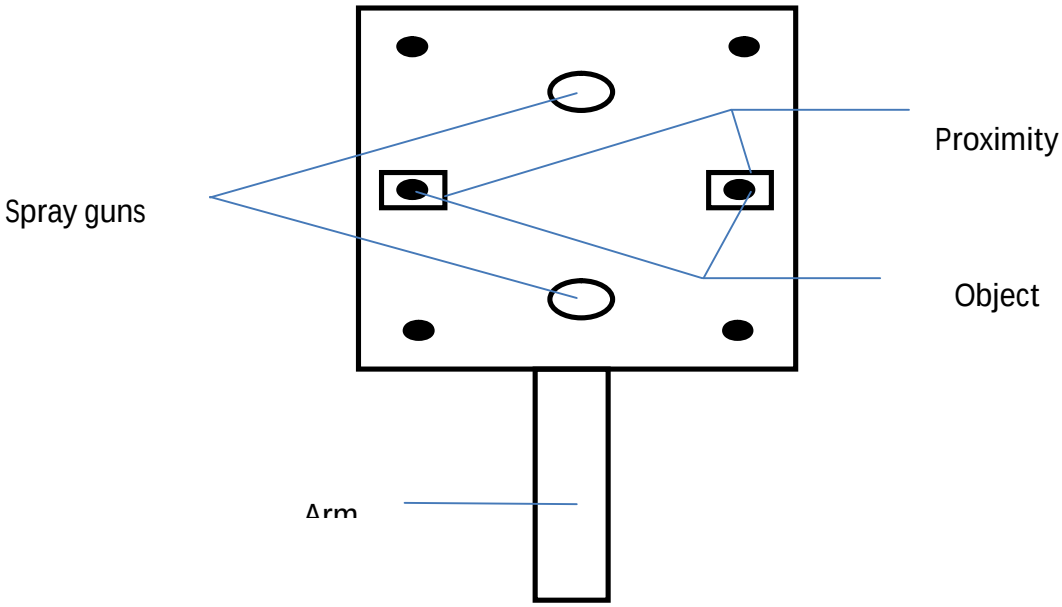

Fig 4-1: Painting Plate.

The painting plate acting as the core of the automated painting system, because it contains the spray guns, the object sensor, and the proximity sensors.

System Elements:

1- (5) motors to provide:

a- spray gun motor,

b- Painting plate horizontal movements motor,

c- Painting plate vertical movements motor,

d- Holding arm forward and backward.

2- Proximity sensor.

3- Object detector.

4.3.2 Spray System conceptual design:

Those part are responsible for applying the paint to the designated part of the aircraft by pumped paint through pipes and hoses, the control signal is directly sent to the compressor motor if certain conditions are verified as follows:

1- The metallic/ object sensor is giving positive signal that there is an object to be painted.

2-Due to the asymmetrical shape the proximity sensor responsible to sustain the pre-specified distance (8-10) inch’s for high quality painting achievements. The output signal from this sensor is directly used to control the Holding Arm Mechanism forward or backward and keep (8-10) inches between the aircraft body and the automated painting system in a closed loop with feedback control system.

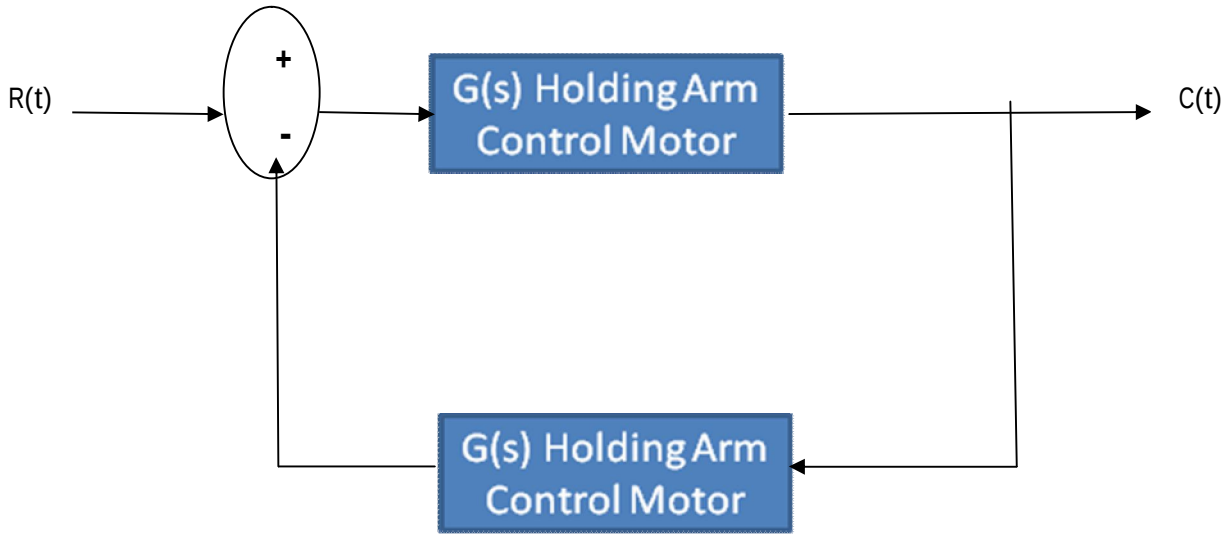

Fig 4-2: Holding Arm control system.

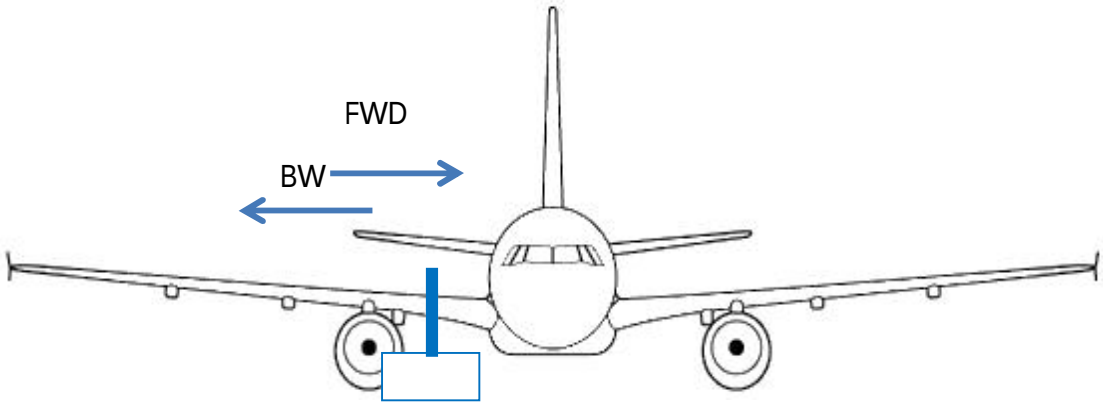

Fig 4-3: Holding Arm movements

The aircraft painting process is divided into zones (upper, lower, and sides), to be easy in the painting operation.

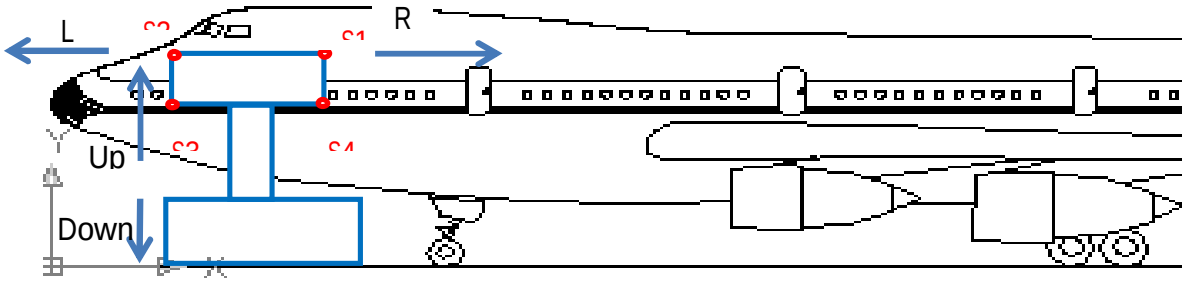

Fig 4-4: Automated system movements.

4.4 Sensors and Motors

4.4.1 Proximity sensors:

Proximity sensors detect the presence of an object (usually called the target) without physical contact. Detection of the presence of solids such As metal, glass, and plastics, as well as most liquids, is achieved by means of a sensing magnetic or electrostatic field.

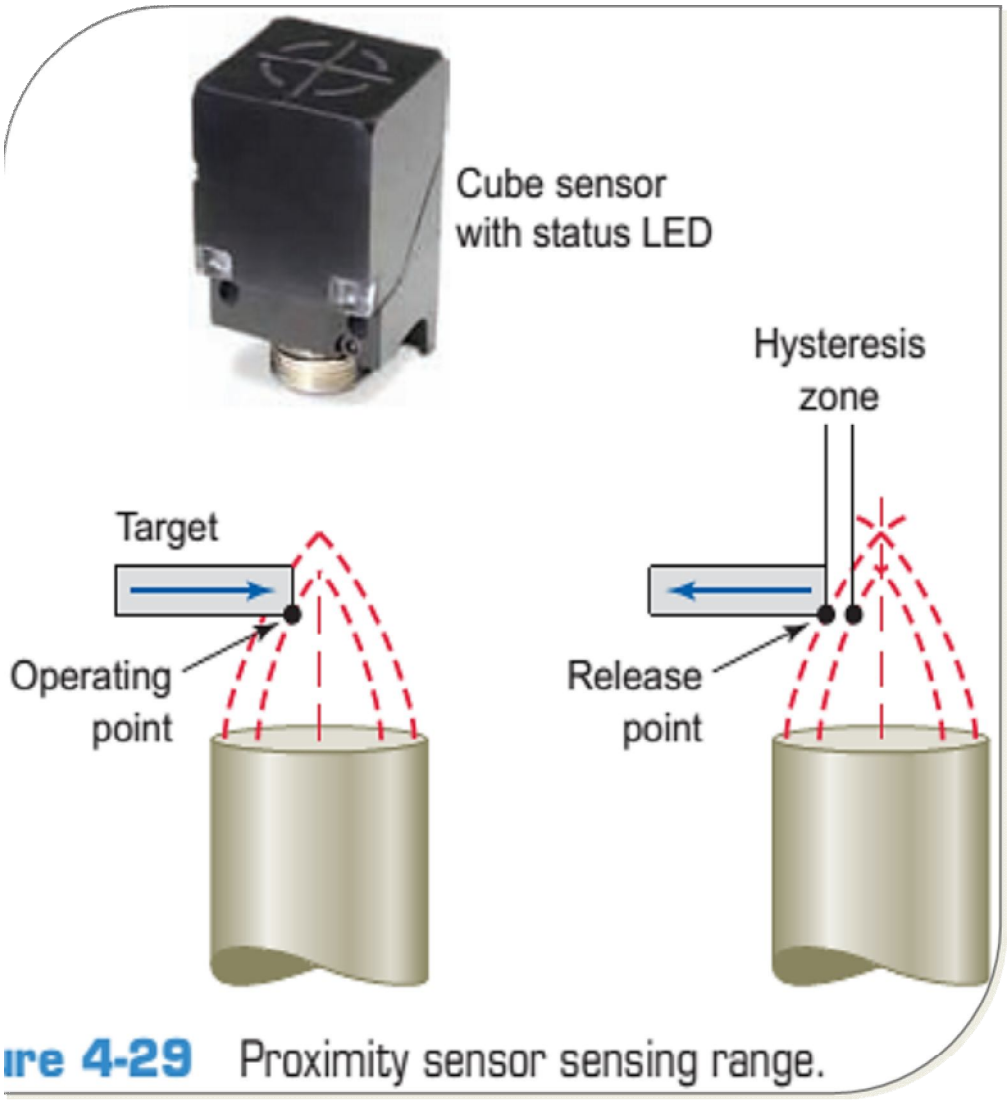

Fig 4-5: proximity sensor.

- When an application calls for noncontact metallic target sensing, an inductive-type proximity sensor is used. Inductive proximity
-

3.2.3.1 Limit switch

Limit switches are usually not operator accessible. Instead they are activated by moving parts on the machine. They are usually use mechanical switches. They are sometimes called cam switches because many are operated by a camming action when a moving part passes by the switch as shown as figure (3.9).In this model parking structure consist of 6 Limit switches NO, each floor consist of three limits.Limit switches are used as input to the PLC to indicate the slots status.

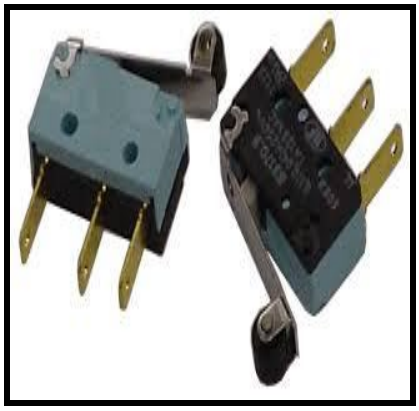

Figure (3.6): Limit switch

Fig 4-6: inductive proximity sensor

Sensors are used to detect both ferrous metals and nonferrous metals.

- Inductive proximity sensors operate under the electrical principle of inductance, where a fluctuating current induces an electromotive force (emf) in a target object.

When a metal object enters the field, eddy currents are induced in the surface of the object.

- The eddy currents on the object absorb some of radiated energy from the sensor, resulting in a loss of energy and change of strength of the oscillator.
- The sensor's detection circuit monitors the oscillator's strength and triggers a solid-state output at a specific level.
- Once the metal object leaves the sensing area, the oscillator returns to its initial value.

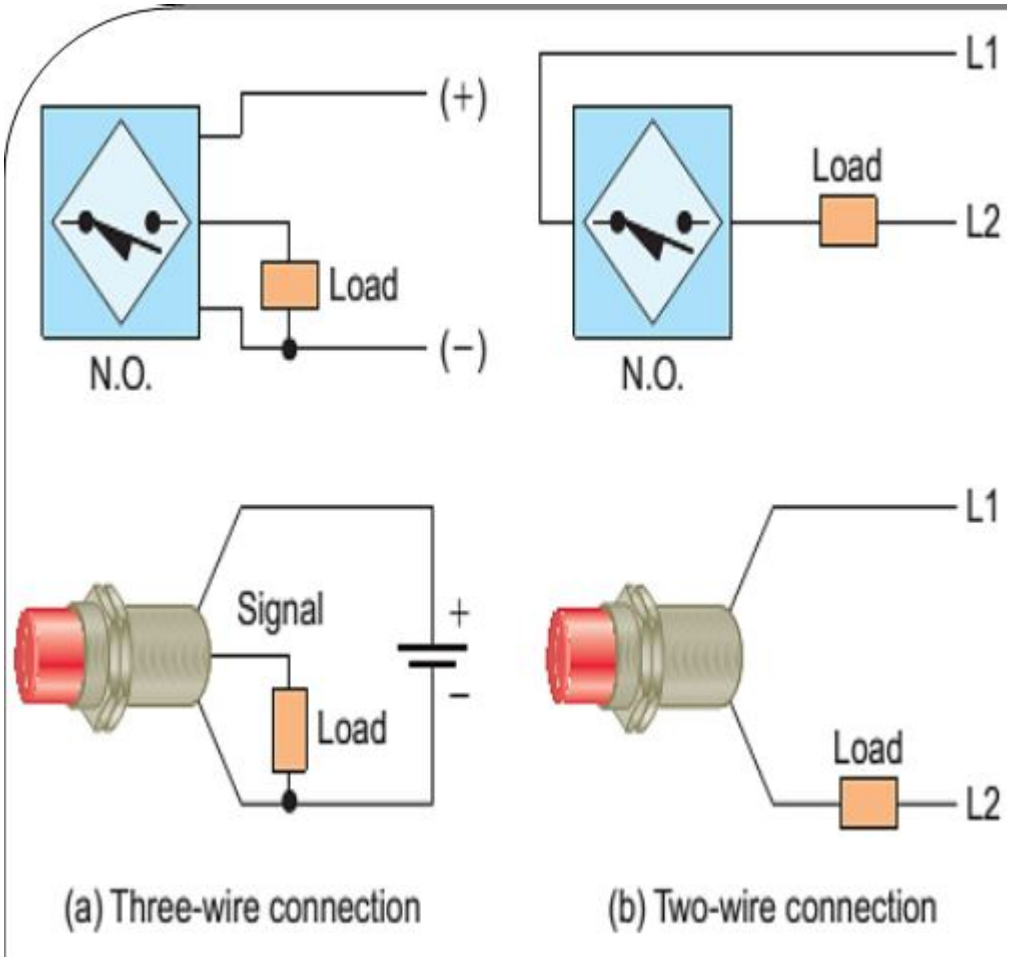

Fig 4-7: shows the operation of inductive proximity sensor.

The inductive proximity was used in the model designed is LJ12A3-4-Z/BY as shown in figure (3.7) and used as an input (I0.0).It is connected to the PLC input module.

- **Features of Proximity Switch LJ12A3-4-Z/BY**
  - Product name: Inductive Proximity Switch.
  - Model: LJ12A3-4-Z/BY.

- Theory : Inductive Sensor
- Wire type: 3 Wire Type (Brown, Blue, Black).
- Output type: PNP NO.
- Detecting distance: 4mm.
- Supply voltage: DC 6-36V.
- Output current: 300mA.
- Detect object: Iron.
- Cable length: 1m/39.4"[13].

Figure (3.8): Proximity Switch LJ12A3-4-Z/BY

3.2.3.1 Limit switch

Limit switches are usually not operator accessible. Instead they are activated by moving parts on the machine. They are usually use mechanical switches. They are sometimes called cam switches because many are operated by a clamming action when a moving part passes by the switch as shown as figure (3.9).In this model parking structure consist of 6 Limit switches NO, each floor consist of three limits. Limit switches are used as input to the PLC to indicate the slots status.

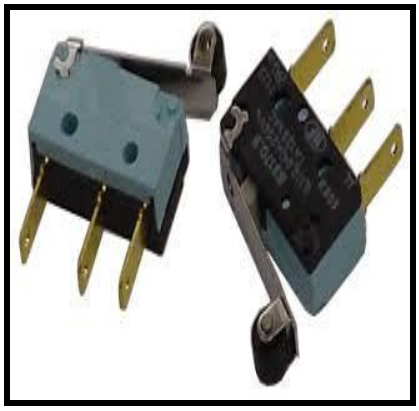

Figure (3.9): Limit switch

4.4.2. D.C. SERVO DRIVES

The precise meaning of the term ‘servo’ in the context of motors and drives is difficult to pin down. Broadly speaking, if a drive incorporates ‘servo’ in its description, the implication is that it is intended specifically for closed-loop or feedback control, usually of shaft torque, speed, or position. Early servomechanisms were developed primarily for military applications, and it quickly became apparent that standard d.c. motors were not always suited to precision control. In particular high torque to inertia ratios were needed, together with smooth ripple-free torque. Motors were therefore developed to meet these exacting requirements, and not surprisingly they were, and still are, much more expensive than their industrial counterparts. Whether the extra expense of a servo motor can be justified depends on the specification, but prospective users should always be on their guard to ensure they are not pressed into an expensive purchase when a conventional industrial drive could cope perfectly well.

The majority of servo drives are sold in modular form, consisting of a high-performance permanent magnet motor, often with an integral D.C. Motor Drives 159 tacho-generator, and a chopper-type power amplifier module. The drive amplifier normally requires a separate regulated dc. Power supply, if, as is normally the case, the power is to be drawn from the A.C. mains. Continuous output powers range from a few watts up to

perhaps 2–3 kW, with voltages of 12, 24, 48, and multiples of 50 V being standard.

Figure 4.10 Servo motor

Although there is no sharp dividing line between servo motors and ordinary motors, the servo type will be intended for use in applications which require rapid acceleration and deceleration. The design of the motor will reflect this by catering for intermittent currents (and hence torques) of many times the continuously rated value. Because most servo motors are small, their armature resistances are relatively high:

the short-circuit (locked-rotor) current at full armature voltage is therefore perhaps only five times the continuously rated current, and the drive amplifier will normally be selected so that it can cope with this condition without difficulty, giving the motor a very rapid acceleration from rest. The even more arduous condition in which the full armature voltage is suddenly reversed with the motor running at full speed is also

Quite normal. (Both of these modes of operation would of course be quite unthinkable with a large D.C. motor, because of the huge currents which would flow as a result of the much lower per-unit armature resistance.) Because the drive amplifier must have a high current capability to provide for the high accelerations demanded, it is not

normally necessary to employ an inner current-loop of the type discussed earlier .In order to maximize acceleration, the rotor inertia must be minimized, and one obvious way to achieve this is to construct a motor in which only the electric circuit (conductors) on the rotor move, the magnetic part (either iron or permanent magnet) remaining stationary. This principle is adopted in 'ironless rotor' and 'printed armature' motors. In the ironless rotor or moving-coil type the armature conductors are formed as a thin-walled cylinder consisting essentially of nothing more than varnished wires wound in skewed form together with the disc-type commutator (not shown). Inside the armature sits a 2-pole (upper N, lower S) permanent magnet, which provides the radial flux, and outside it is a steel cylindrical shell which completes the magnetic circuit. Needless to say the absence of slots to support the armature winding results in a relatively fragile structure, which is therefore limited to diameters of not much over 1 cm. Because of their small size they are often known as micro motors, and are very widely used in cameras, video systems, card readers etc. The printed armature type is altogether more robust, and is made in sizes up to a few kilowatts. They are generally made in disc or pancake form, with the direction of flux axial and the armature current radial. The armature conductors resemble spokes on a wheel; the conductors themselves being formed on a lightweight disc. Early versions were made by using printed-circuit techniques, but pressed fabrication is now more common. Since there are usually at least 100 armature conductors, the torque remains almost constant as the rotor turns, this allows them to produce very smooth rotation at low speed. Inertia and armature inductance are low, giving a good dynamic response, and the short and fat shape makes them suitable for applications such as machine tools and disc drives where axial space is at a premium.

4.4.3 Position control

As mentioned earlier many servo motors are used in closed-loop position control applications, so it is appropriate to look briefly at how this is achieved. Later we will see that the stepping motor provides an alternative open-loop method of position control, which can be cheaper for some applications. In the example shown in Figure below, the angular position of the output shaft is intended to follow the reference

voltage (v ref), but it should be clear that if the motor drives a toothed belt linear outputs can also be obtained. The potentiometer mounted on the output shaft provides a feedback voltage proportional to the actual position of the output shaft. The voltage from this potentiometer must be a linear function of angle, and must not vary with temperature; otherwise the accuracy of the system will be in doubt. The feedback voltage (representing the actual angle of the shaft) is subtracted from the reference voltage (representing the desired position) and the resulting position error signal is amplified and used to drive the motor so as to rotate the output shaft in the desired direction. When the output shaft reaches the target position, the position error becomes zero, no voltage is applied to the motor, and the output shaft remains at rest. Any attempt to physically move the output shaft from its target position immediately creates a position error and a restoring torque is applied by the motor.

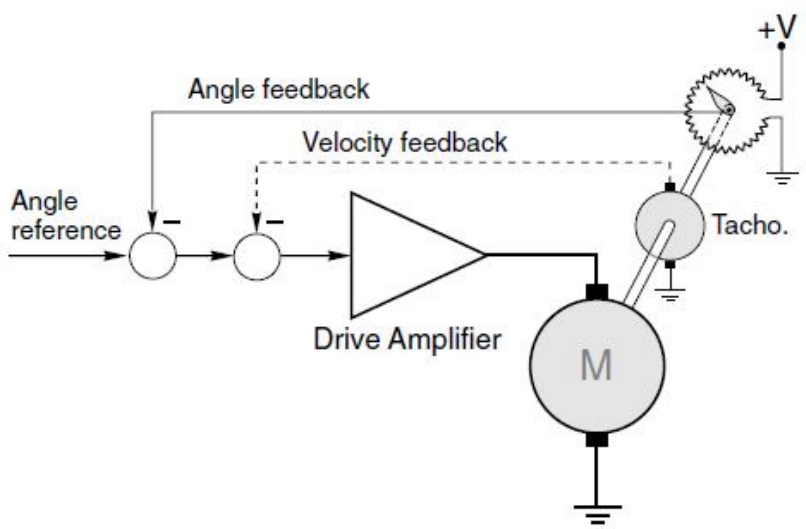

Figure 4-11: position control servo-motor.

4.5 System operation:

1- Q1, Q2, Q3, Q4 limit switches control the movement of the painting plate in the pre-specified aircraft section, so any one of them active the system will be active.

2- this system will not operate the upper spray gun un less the object sensor reading ON then both of them working , otherwise only the lower painting operating ON.

3- To keep the distance between the spray gun and the aircraft surface (8-10) inches the position sensor (proximity) send a signal to the servo-motor in the holding arm to move forward or backward.

4.6 Project circuit Diagram

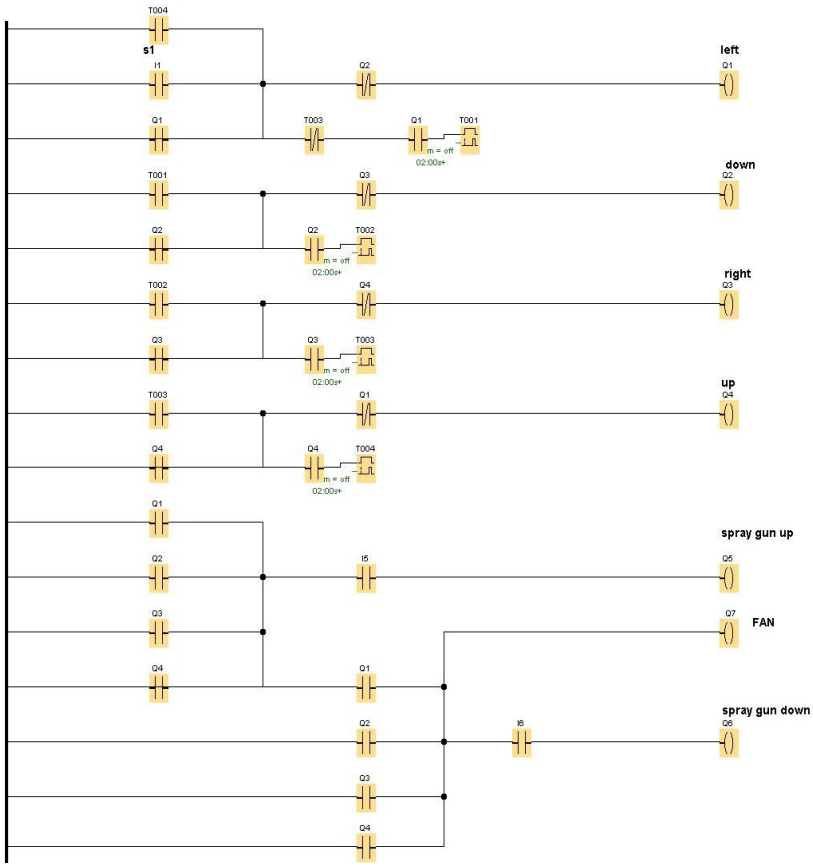

Fig 4.12 painting plate circuit diagram

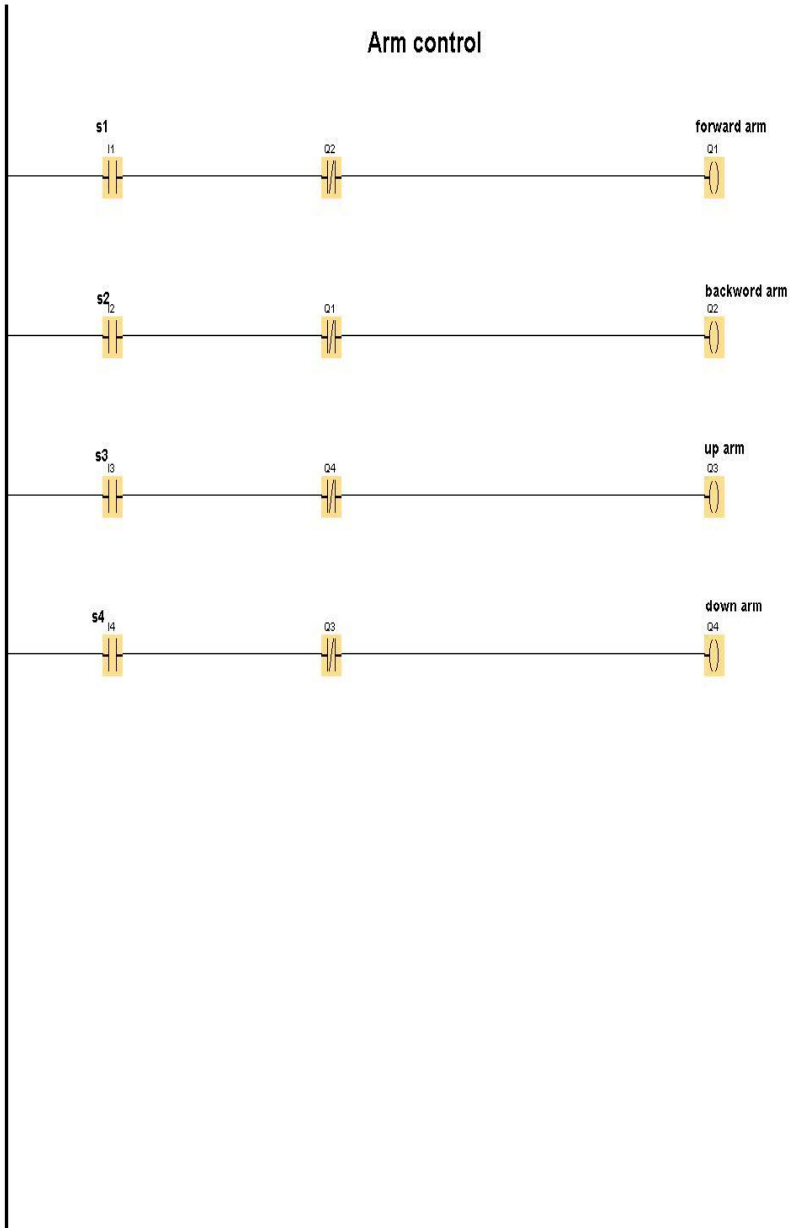

Fig 4.13 Arm control circuit diagram

Circuit Diagram Key:

- Q1, Q3: Horizontal Motor (Left, Right).
- Q2, Q4: Vertical Motor (Dawn, Up).
- Q5: Spray gun driving up.
- Q6: Spray gun Driving down.
- S1, S2, S3, S4: limit switch.
- I7: Object Detector.
- Q7: Fan motor.
- T001, T002, T003, T004: Timers for illustration purpose.