2.1 Preface:

Industrial Automation is a discipline that includes knowledge and expertise from various branches of engineering including electrical, electronics, chemical, mechanical, aeronautical, communications and more recently computer and software engineering. Automation & Control by its very nature demands a cross Fertilization of these faculties. Industrial automation Engineers have always drawn new technologies and implemented original or enhanced versions to meet their requirements. As the range of technology diversifies the demand on the innovative ability of these Engineers has increased. [1]

Society in its daily endeavors has become so dependent on automation that it is difficult to imagine life without automation engineering projects. In addition to the industrial production with which it is popularly associated, it now covers a number of unexpected areas. Trade, environmental protection engineering, traffic engineering, agriculture, building engineering, and medical engineering are but some of the areas where automation is playing a prominent role. Automation engineering is a cross sectional discipline that requires proportional knowledge in hardware and software development and their applications. In the past, automation engineering was mainly understood as control engineering dealing with a number of electrical and electronic components. This picture has changed since computers and software have made their way into every component and element of communications and automation.

Industrial automation engineers carry a lot of responsibility in their profession. No other domain demands so much quality from so many perspectives of the function, yet with significant restrictions on the budget. The project managers of industrial automation projects have significant resource constraint, considering the ever changing demands of its management, trying to adopt the rapid acceleration of the technological changes and simultaneously trying to maintain the reliability and unbreakable security of the plant and its instruments.

2.2 Historical Background

Francis Davis Millet is generally credited with the invention of spray painting. In 1892, working under extremely tight deadlines to complete construction of the World's Columbian Exposition, Daniel Burnham appointed Millet to replace the fair's official director of color; William Pretyman had resigned following a dispute with Burnham. After experimenting, Millet settled on a mix of oil and white lead that could be applied using a hose and special nozzle, which would take considerably less time than traditional brush painting. .[2]

In 1949, Edward Seymour developed spray paint that could be delivered from an aerosol can. Then this methodology implemented from that time to all aspect of arts, industrial application, even furniture industry, automobile industry and aviation industry in painting aircrafts or the components.[3]

But unfortunately the data of the exact experience of the airlines or MROs are classified as the aviation culture. So big companies like Boing and Airbus offering the airlines with the painting services without providing the detailed process operations.

2.3 previous works

According to the same previous mentioned point of classifying and security of data, information and knowledge there are some firms offer the automated painting facilities without providing the design details also there some technical papers on the same objectives like the following:

March 1996 The bankruptcy of Fokker Aircraft, during the next years the paint department finished the last 34 aircraft for the customers under the responsibility of the trustees.

1997 An investment company tried to restart the complete Fokker Aircraft Company under the name REKKOF Restart. The paint department and his

employees were kept on painting aircraft under this name for maintenance customers. After deciding restarting was not feasible yet the investment company retreated.

1999 Ben Vastenhouten Fran's Groot established in one of the newest paint facilities of Fokker Aircraft an independent painting company named Quality Aircraft Painting Services. Ben has gained 35 years of experience in painting at the Fokker Company. Fran's had a senior position in Marketing and Sales in the same company.

QAPS focused on all regional airlines as well as the business aviation. Our philosophy: “Once a customer always a customer”. Our commitment to the customer to perform services in such a way that they will return with future business.

November 2005 QAPS opened his second paint facility to be able to accommodate new customers while maintaining the capacity to serve existing customers.

January 2007 Merger with STTS France enlarging the capabilities and expertise to long range wide body aircraft off all manufacturers.

November 2010 The former Fokker Aircraft facilities at Schiphol had to be abandoned for the development of logistic centers

April 2011 Start of operation in the brand-new state-of-the-art facility at Amsterdam Lely tad Airport dedicated to Regional and Business Aviation[4].

ASSA ABLOY painting solution

Swedish painting Solution Company provide high quality painting service to airlines with approvals from FAA, EASA, BCA.

Fig 2-1 Show ASSA ABLOY Painting Facility.

ASSA ABLOY is a famous painting workshop provider they provide their services to the following:

- Bell Textron
- Bombardier
- Cessna
- GAMECO
- Hawker Beech craft
- Honda Jet
- Lear Jet
- Singapore Airlines
- Royal Air Force
- US Air Force

They provide both traditional and automated painting hanger engages the environmental solution to deal with the waste and pollution associated with the painting process.

Fig 2-2 STTS Toulouse A350 /A380 paint hangar merging the traditional and automated painting Techniques.

For each coating being applied, there are air temperature and humidity requirements that must be met in order to achieve an acceptable paint drying rate that yields a high-quality appearance. If conditions are too cold and/or dry, the solvents within the coating may evaporate too quickly, causing a blistering defect. Conversely, if conditions are too warm and/or wet, the solvents within the coating will evaporate much slower, leading to a low viscosity of the applied coating on the surface, which then causes it to sag

Coating manufacturers therefore typically specify a single air temperature and humidity condition that must be maintained so that the rate of solvent evaporation within the coating is appropriate to prevent either of these types of defects.[5]

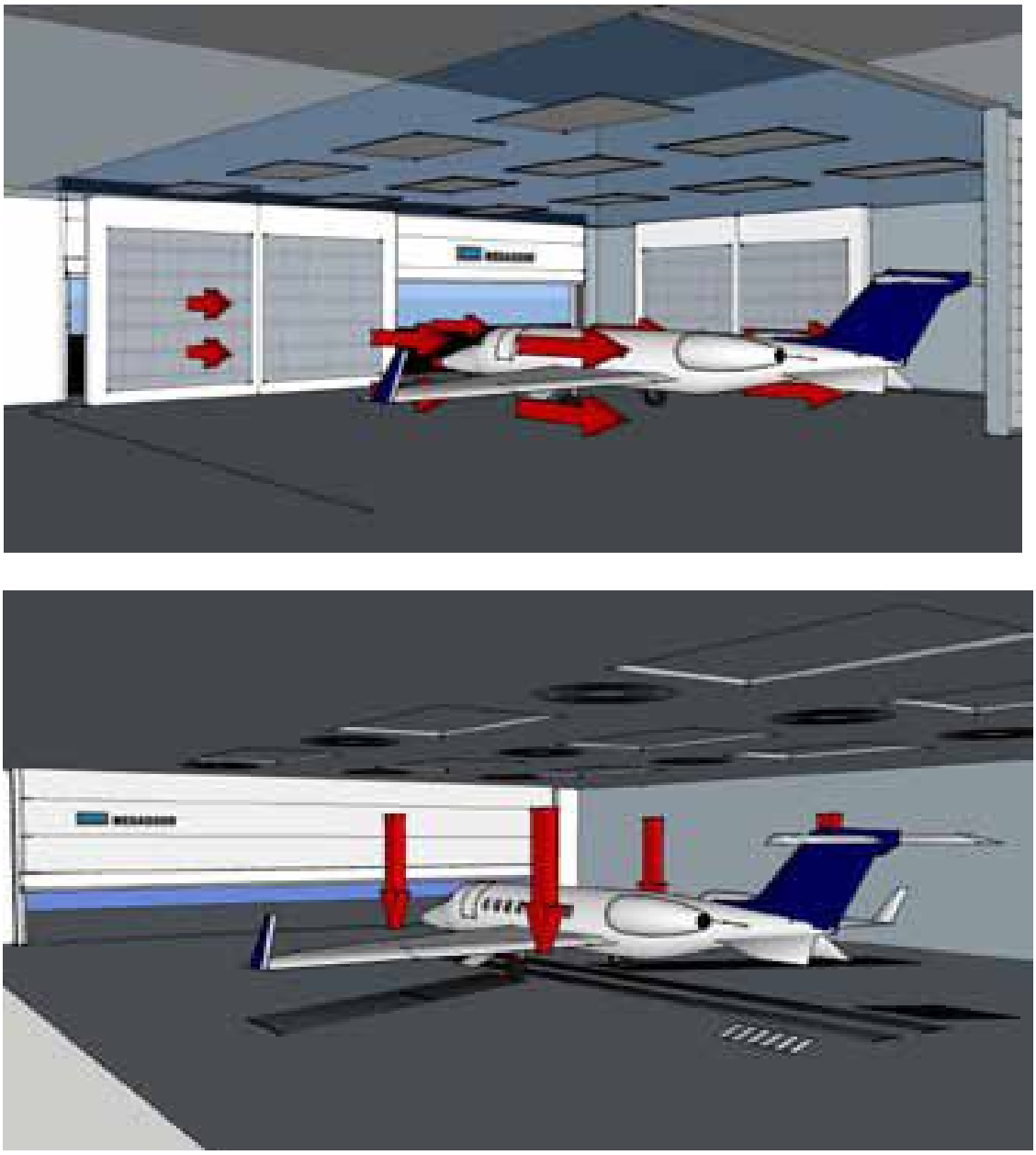

Fig 2-3: Drying air cooling fans.

Before getting deep studying of the research element there are very important definitions should be considered:

2.4 Industry, Automation and Control

Modern manufacturing of product in small and large series production utilize conveyers and automated assembly lines .The purpose is usually to reduce and replace as much as possible labour intensive and dangerous assembly with automated ones.

2.4.1 Industry

In a general sense the term “Industry” is defined as follows.

- Systematic Economic Activity that could be related to Manufacture/Service/ Trade.
- The production of goods, especially those made in factories.
- The part of industry that involves the production of steel, coal, or large goods such as aircraft is called heavy industry.
- The part of industry that involves the production of small goods, for example electronic equipment, is called light industry .
- The manufacturing or technically productive enterprises in a particular field, country, region, or economy viewed collectively, or one of these individually.
- A single industry is often named after its principal product; for example, the auto industry. For statistical purposes, industries are categorized generally according a uniform classification code such as Standard Industrial Classification (SIC).
- Any general business activity or commercial enterprise that can be isolated from others, such as the tourist industry or the entertainment industry.[6]

2.4.2 Automation

The word ‘Automation’ is derived from Greek words “Auto”(self) and “Matos” (moving). Automation therefore is the mechanism for systems that “move by itself”. However, apart from this original sense of the word, automated systems also achieve significantly superior performance than

what is possible with manual systems, in terms of power, precision and speed of operation.

- Automation is a set of technologies that results in operation of machines and systems without significant human intervention and achieves performance superior to manual operation.
- Automation is a method using a wide range of computer- and machine-aided tasks to help improve productivity and create easier ways to do business. Different types of automation are commonly used in different types of industries. For example, automated meters and pumps assist consumers daily when they pump their gas. In industrial settings, different types of automation provide benefits to companies including decreased part-cycle times, higher quality products, and increased worker safety.

  The application of machines to tasks once performed by human beings or, increasingly, to tasks that would otherwise be impossible. Although the term mechanization is often used to refer to the simple replacement of human labor by machines, automation generally implies the integration of machines into a self-governing system.

2.4.3 Control

The earliest feedback control mechanism was used to tent the sails of windmills. It was patented by Edmund Lee in 1745. The centrifugal governor, which dates to the last quarter of the 18th century, was used to adjust the gap between millstones. The centrifugal governor was also used in the automatic flour mill developed by Oliver Evans in 1785, making it the first completely automated industrial process. The governor was adopted by James Watt for use on a steam engine in 1788 after Watt's partner Boulton saw one at a flour mill Boulton & Watt were building.

The governor could not actually hold a set speed; the engine would assume a new constant speed in response to load changes. The governor was able to handle smaller variations such as those caused by fluctuating heat load to

the boiler. Also, there was a tendency for oscillation whenever there was a speed change. As a consequence, engines equipped with this governor were not suitable for operations requiring constant speed, such as cotton spinning. Several improvements to the governor, plus improvements to valve cut-off timing on the steam engine, made the engine suitable for most industrial uses before the end of the 19th century. Advances in the steam engine stayed well ahead of science, both thermodynamics and control theory.

The governor received relatively little scientific attention until James Clerk Maxwell published a paper that established the beginning of a theoretical basis for understanding control theory. Development of the electronic amplifier during the 1920s, which was important for long distance telephony, required a higher signal to noise ratio, which was solved by negative feedback noise cancellation. This and other telephony applications contributed to control theory. Military applications during the Second World War that contributed to and benefited from control theory were fire-control systems and aircraft controls. The word "automation" itself was coined in the 1940s by General Electric. The so-called classical theoretical treatment of control theory dates to the 1940s and 1950s.

Relay logic was introduced with factory electrification, which underwent rapid adaption from 1900 though the 1920s. Central electric power stations were also undergoing rapid growth and operation of new high pressure boilers, steam turbines and electrical substations created a large demand for instruments and controls.

Central control rooms became common in the 1920s, but as late as the early 1930s, most process control was on-off. Operators typically monitored charts drawn by recorders that plotted data from instruments. To make corrections, operators manually opened or closed valves or turned switches on or off. Control rooms also used color coded lights to send signals to workers in the plant to manually make certain changes.

Controllers, which were able to make calculated changes in response to deviations from a set point rather than on-off control, began being introduced the 1930s. Controllers allowed manufacturing to continue showing productivity gains to offset the declining influence of factory electrification. In 1959 Texaco's Port Arthur refinery became the first chemical plant to use digital control. Conversion of factories to digital control began to spread rapidly in the 1970s as the price of computer hardware fell.[7]

Open and closed loop

All the elements constituting the measurement and control of a single variable are called a control loop. Control that uses a measured signal, feeds the signal back and compares it to a set point, calculates and sends a return signal to make a correction, is called closed loop control. If the controller does not incorporate feedback to make a correction then it is open loop.

Loop control is normally accomplished with a controller. The theoretical basis of open and closed loop automation is control theory.[8]

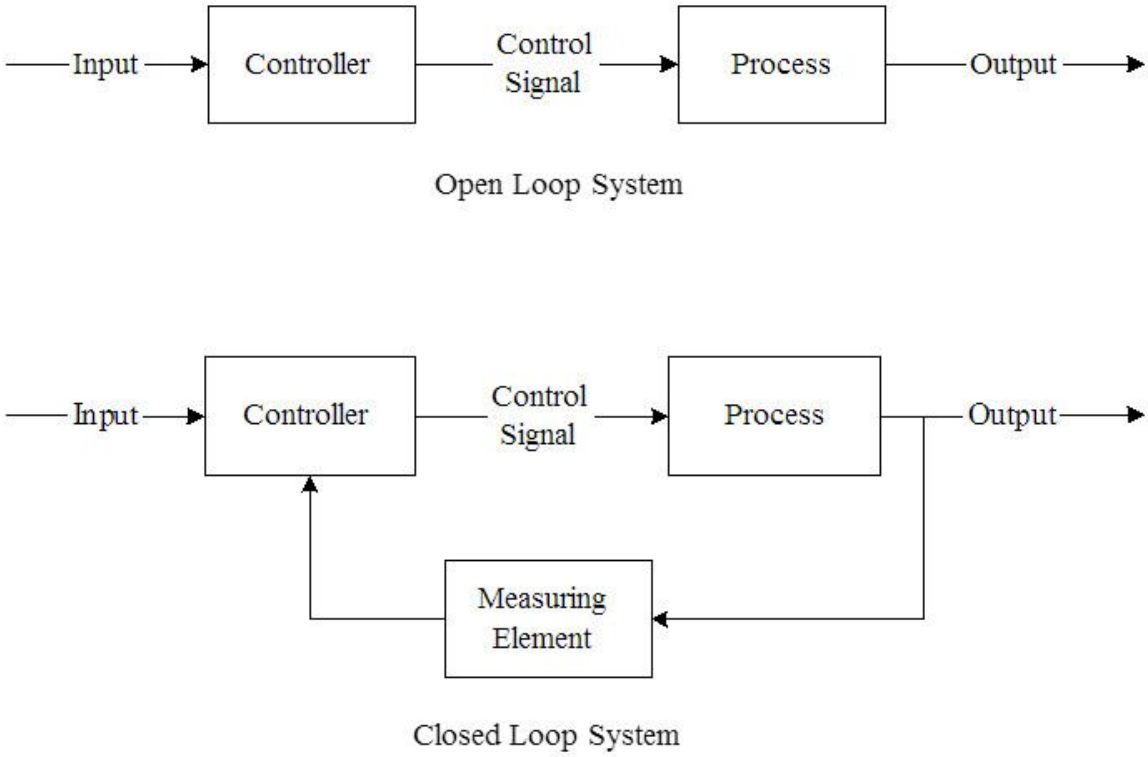

Fig. 2-4: open loop and closed loop control system

2.5 Significant applications

The automatic telephone switchboard was introduced in 1892 along with dial telephones By 1929, 31.9% of the Bell system was automatic. Automatic telephone switching originally used vacuum tube amplifiers and electro-mechanical switches, which consumed a large amount of electricity. Call volume eventually grew so fast that it was feared the telephone system would consume all electricity production, prompting Bell Labs to begin research on the transistor .The logic performed by telephone switching relays was the inspiration for the digital computer.[9]

The first commercially successful glass bottle blowing machine was an automatic model introduced in 1905. The machine, operated by a two-man crew working 12-hour shifts, could produce 17,280 bottles in 24 hours, compared to 2,880 bottles made by a crew of six men and boys working in a

shop for a day. The cost of making bottles by machine was 10 to 12 cents per gross compared to $1.80 per gross by the manual glassblowers and helpers.

Sectional electric drives were developed using control theory. Sectional electric drives are used on different sections of a machine where a precise differential must be maintained between the sections. In steel rolling, the metal elongates as it passes through pairs of rollers, which must run at successively faster speeds. In paper making the paper sheet shrinks as it passes around steam heated drying arranged in groups, which must run at successively slower speeds. The first application of a sectional electric drive was on a paper machine in 1919. One of the most important developments in the steel industry during the 20th century was continuous wide strip rolling, developed by Armco in 1928.

Before automation many chemicals were made in batches. In 1930, with the widespread use of instruments and the emerging use of controllers, the founder of Dow Chemical Co. was advocating continuous production. Self-acting machine tools that displaced hand dexterity so they could be operated by boys and unskilled laborers were developed by James Nasmyth in the 1840s. Machine tools were automated with Numerical control (NC) using punched paper tape in the 1950s. This soon evolved into computerized numerical control (CNC).[10]

Today extensive automation is practiced in practically every type of manufacturing and assembly process. Some of the larger processes include electrical power generation, oil refining, chemicals, steel mills, plastics, cement plants, fertilizer plants, pulp and paper mills, automobile and truck assembly, aircraft production, glass manufacturing, natural gas separation plants, food and beverage processing, canning and bottling and manufacture of various kinds of parts. Robots are especially useful in hazardous applications like automobile spray painting. Robots are also used to assemble electronic circuit boards. Automotive welding is done with robots and automatic welders are used in applications like pipelines.

- Control is a set of technologies that achieves desired patterns of variations of operational parameters and sequences for machines and systems by providing the input signals necessary.

One of the simplest types of control is on-off control. An example is the thermostats used on household appliances. Electromechanical thermostats used in HVAC may only have had provision for on/off control of heating or cooling systems. Electronic controllers may add multiple stages of heating and variable fan speed control.

Sequence control, in which a programmed sequence of discrete operations is performed, often based on system logic that involves system states. An elevator control system is an example of sequence control.

The advanced type of automation that revolutionized manufacturing, aircraft, communications and other industries, is feedback control, which is usually continuous and involves taking measurements using a sensor and making calculated adjustments to keep the measured variable within a set range.

2.5.1. Sequential control and logical sequence or system state control

Sequential control may be either to a fixed sequence or to a logical one that will perform different actions depending on various system states. An example of an adjustable but otherwise fixed sequence is a timer on a lawn sprinkler.

States refer to the various conditions that can occur in a use or sequence scenario of the system. An example is an elevator, which uses logic based on the system state to perform certain actions in response to its state and operator input. For example, if the operator presses the floor n button, the system will respond depending on whether the elevator is stopped or moving, going up or down, or if the door is open or closed, and other conditions.[11]

An early development of sequential control was relay logic, by which electrical relays engage electrical contacts which either start or interrupt power to a device. Relays were first used in telegraph networks before being developed for controlling other devices, such as when starting and stopping industrial-sized electric motors or opening and closing solenoid valves. Using relays for control purposes allowed event-driven control, where actions could be triggered out of sequence, in response to external events. These were more flexible in their response than the rigid single-sequence cam timers. More complicated examples involved maintaining safe sequences for devices such as swing bridge controls, where a lock bolt needed to be disengaged before the bridge could be moved, and the lock bolt could not be released until the safety gates had already been closed.

The total number of relays, cam ,timers and drum sequencers can number into the hundreds or even thousands in some factories. Early programming techniques and languages were needed to make such systems manageable, one of the first being ladder logic, where diagrams of the interconnected relays resembled the rungs of a ladder. Special computers called programmable logic controllers were later designed to replace these collections of hardware with a single, more easily re-programmed unit.

In a typical hard wired motor start and stop circuit (called a control circuit) a motor is started by pushing a "Start" or "Run" button that activates a pair of electrical relays. The "lock-in" relay locks in contacts that keep the control circuit energized when the push button is released. (The start button is a normally open contact and the stop button is normally closed contact.) Another relay energizes a switch that powers the device that throws the motor starter switch (three sets of contacts for three phase industrial power) in the main power circuit. (Note: Large motors use high voltage and experience high in-rush current, making speed important in making and breaking contact. This can be dangerous for personnel and property with manual switches.) All contacts are held engaged by their respective electromagnets until a "stop" or "off" button is pressed, which de-energizes the lock in relay. See diagram: Motor Starters Hand-Off-Auto with Start-

Stop (Note: The above description is the "Auto" position case in this diagram).[12]

Commonly interlocks are added to a control circuit. Suppose that the motor in the example is powering machinery that has a critical need for lubrication. In this case an interlock could be added to insure that the oil pump is running before the motor starts. Timers limit switches and electric eyes are other common elements in control circuits.

Solenoid valves are widely used on compressed air or hydraulic fluid for powering actuators on mechanical components. While motors are used to supply continuous rotary motion, actuators are typically a better choice for intermittently creating a limited range of movement for a mechanical component, such as moving various mechanical arms, opening or closing valves, raising heavy press rolls, applying pressure to presses.[13]

2.5.2. Computer control

Computers can perform both sequential control and feedback control, and typically a single computer will do both in an industrial application. Programmable logic controllers (PLCs) are a type of special purpose microprocessor that replaced many hardware components such as timers and drum sequencers used in relay logic type systems. General purpose process control computers have increasingly replaced stand alone controllers, with a single computer able to perform the operations of hundreds of controllers. Process control computers can process data from a network of PLCs, instruments and controllers in order to implement typical (such as PID) control of many individual variables or, in some cases, to implement complex control algorithms using multiple inputs and mathematical manipulations. They can also analyze data and create real time graphical displays for operators and run reports for operators, engineers and management.

Control of an automated teller machine (ATM) is an example of an interactive process in which a computer will perform a logic derived

response to a user selection based on information retrieved from a networked database. The ATM process has similarities with other online transaction processes. The different logical responses are called scenarios. Such processes are typically designed with the aid of use cases and flowcharts, which guide the writing of the software code.[14]

2.6 AUTOMATION VERSUS CONTROL SYSTEM

It is important at this stage to understand some of the differences in the senses that these two terms are generally interpreted in technical contexts and specifically in this course. These are given below:

1. Automation Systems may include Control Systems but the reverse is not true. Control Systems may be parts of Automation Systems.
2. The main function of control systems is to ensure that outputs follow the set points. However, Automation Systems may have much more functionality, such as computing set points for control systems, monitoring system performance, plant startup or shutdown, job and equipment scheduling etc. [15]

2.7 Roles of automation in industry

Automation Systems are essential for most modern industries. It is therefore important to understand why they are so, before we study these in detail in this course.

A. Engineering prospective:

- Similarly, systems such as Automated Guided Vehicles, Industrial Robots, Automated Crane and Conveyor Systems reduce material handling time.
- Automation also reduces cost of production significantly by efficient usage of energy, manpower and material.
- The product quality that can be achieved with automated precision machines and processes cannot be achieved with manual operations. Moreover, since operation is automated, the same quality would be achieved for thousands of parts with little variation.

- Industrial Products go through their life cycles, which consist of various stages. At first, a product is conceived based on Market feedbacks, as well as Research and Development Activities. Once conceived the product is designed. Prototype Manufacturing is generally needed to prove the design. Once the design is proved, Production Planning and Installation must be carried out to ensure that the necessary resources and strategies for mass manufacturing are in place.
- This is followed by the actual manufacture and quality control activities through which the product is mass-produced.
- This is followed by a number of commercial activities through which the product is actually sold in the market.
- Automation also reduces the overall product life cycle i.e., the time required to complete

  (i) Product conception and design.

  (ii) Process planning and installation.

  (iii) Various stages of the product life cycle are all or partially automated to enhance the product issues (accuracy, quality, time…)

B. Economical prospective:

Fig 2-5 production cost elements

1- Manufacturing processes, basically, produce finished product from raw/unfinished material using energy, manpower and equipment and infrastructure.

2- Since an industry is essentially a “systematic economic activity”, the fundamental objective of any industry is to make profit.

3- Roughly speaking, Profit = (Price/unit – Cost/unit) x Production Volume,

So profit can be maximized by producing good quality products, which may sell at higher price, in larger volumes with less production cost and time.
Fig 2-2 shows the major parameters that affect the cost/unit of a mass-manufactured industrial product.

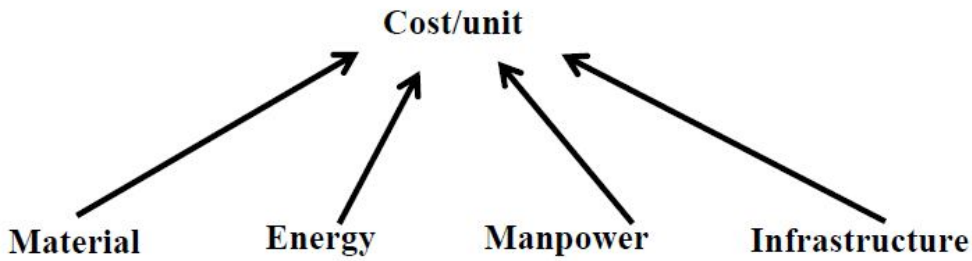

2.8 Economy of Scale and Economy of Scope

2.8.1 Economy of Scale

Reduction in cost per unit resulting from increased production, realized through operational efficiencies. Economies of scale can be accomplished because as production increases, the cost of producing each additional unit falls.

2.8.2 Economy of Scope

The situation that arises when the cost of being able manufacture multiple products simultaneously proves more efficient than that of being able manufacture single product at a time.

2.8.3 Types of production systems

Major industrial processes can be categorized as follows based on their scale and scope of production.

1. Continuous flow process:

Manufactured product is in continuous quantities i.e., the product is not a discrete object. Moreover, for such processes, the volume of production is generally very high, while the product variation is relatively low. Typical examples of such processes include Oil Refineries, Iron and Steel Plants, Cement and Chemical Plants.

2. Mass manufacturing of Discrete Products:

   Products are discrete objects and manufactured in large volumes. Product variation is very limited. Typical examples are Appliances, Automobiles etc.

3. Batch Production:

   In a batch production process the product is either discrete or continuous. However, the variation in product types is larger than in continuous-flow processes. The same set of equipment is used to manufacture all the product types. However for each batch of a given product type a distinct set of operating parameters must be established. This set is often referred to as the “recipe” for the batch. Typical examples here would be Pharmaceuticals, Casting Foundries, Plastic moldings, Printing etc.

4. Job shop Production:

   Typically designed for manufacturing small quantities of discrete products, which are custom built, generally according to drawings supplied by customers. Any variation in the product can be made. Examples include Machine Shops, Prototyping facilities etc.

The above types of production systems are shown in Figure 2.3 categorized according to volumes of production and variability in product types. In general, if the quantity of product is more there is little variation in the product and more varieties of product is manufactured if the quantity of product is lesser.[16]

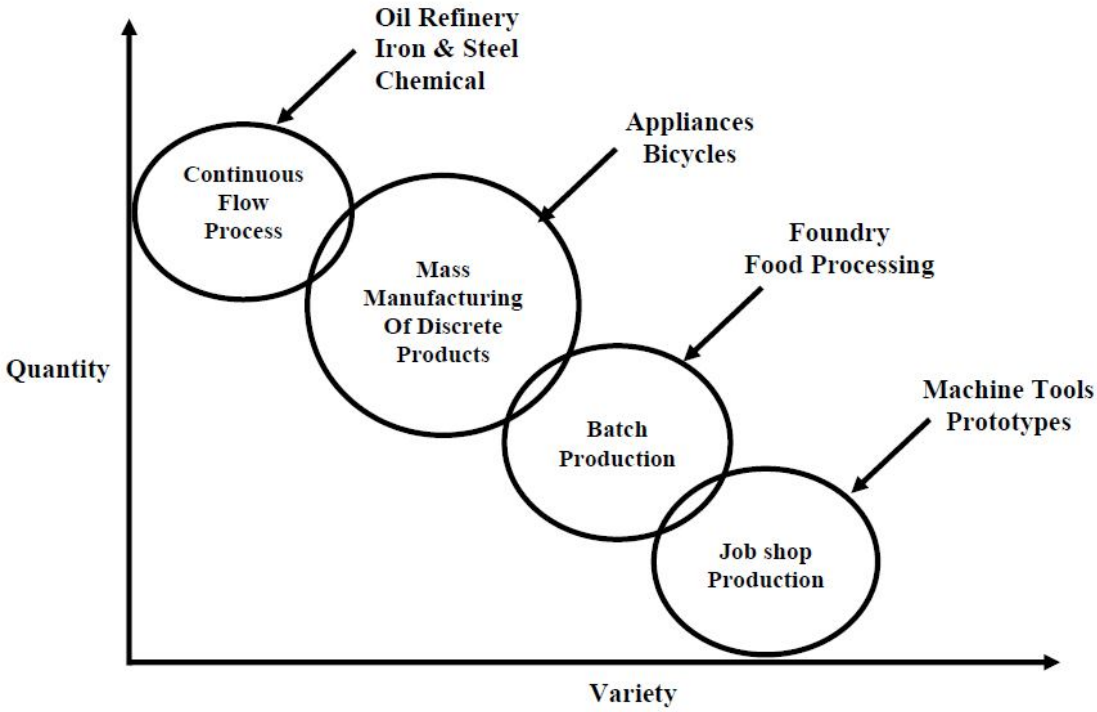

Fig2-6 Types of Production Systems.

2.9 Classical types of Automation Systems

Automation, much like mechanization, depends on machines to execute functions many of which were first performed manually. Mechanization can be seen as the stepping stone between manual labor and automation—it eliminates the need for physical labor, but operators are still needed to oversee machine operations and provide maintenance and feedback. Automation systems, however, eliminate the need for an operator by including feedback and sensory programs. The result is highly independent machine systems that can carry out a task from start to finish, without human assistance.

Automated machines have been seamlessly integrated into countless industries, from carrying out manufacturing tasks to handling telephone

switchboards. In quotidian life, we encounter automated systems each time we use an ATM. The level of human dependence is high, as is the functions we entrust them with—managing our finances, our phone calls, our computers. With such an array of functions, it's not surprising that not all automated systems are the same. Depending on the exact function, one of several different tools may be responsible for an automated system: an artificial neural network, distributed control system, human machine interface, supervisory control and data acquisition, or a programmable logic controller.

Automation systems can be categorized based on the flexibility and level of integration in manufacturing process operations. Various automation systems can be classified as follows:

1. **Fixed Automation:**
   It is used in high volume production with dedicated equipment, which has a fixed set of operation and designed to be efficient for this set. Continuous flow and Discrete Mass Production systems use this automation. e.g. Distillation Process, Conveyors, Paint Shops, Transfer lines etc. A process using mechanized machinery to perform fixed and repetitive operations in order to produce a high volume of similar parts.

Fixed automation is appropriate in the following circumstances:

A. Low variability in product type as also in size, shape, part count and material
B. Predictable and stable demand for 2- to 5-year time period, so that manufacturing capacity requirement is also stable
C. High production volume desired per unit time

D. Significant cost pressures due to competitive market conditions. So automation systems should be tuned to perform optimally for the particular product.

2. Programmable Automation:

It is used for a changeable sequence of operation and configuration of the machines using electronic controls. However, non-trivial programming effort may be needed to reprogram the machine or sequence of operations. Investment on programmable equipment is less, as production process is not changed frequently. It is typically used in Batch process where job variety is low and product volume is medium to high, and sometimes in mass production also. e.g. in Steel Rolling Mills, Paper Mills etc.

3. Flexible Automation:

It is used in Flexible Manufacturing Systems (FMS) which is invariably computer controlled. Human operators give high-level commands in the form of codes entered into computer identifying product and its location in the sequence and the lower level changes are done automatically. Each production machine receives settings/instructions from computer. These automatically loads/unloads required tools and carries out their processing instructions. After processing, products are automatically transferred to next machine. It is typically used in job shops and batch processes where product varieties are high and job volumes are medium to low. Such systems typically use Multipurpose CNC machines, Automated Guided Vehicles (AGV) etc.

Flexible automation, on the other hand is used in the following situations. :

A. Significant variability in product type. Product mix requires a combination of different parts and products to be manufactured from the same production system

B. Product life cycles are short. Frequent up gradation and design modifications alter production requirements

C. Production volumes are moderate, and demand is not as predictable

4. Integrated Automation:

It denotes complete automation of a manufacturing plant, with all processes functioning under computer control and under coordination through digital information processing. It includes technologies such as computer-aided design and manufacturing, computer-aided process planning, computer numerical control machine tools, flexible machining systems, automated storage and retrieval systems, automated material handling systems such as robots and automated cranes and conveyors, computerized scheduling and production control. It may also integrate a business system through a common database. In other words, it symbolizes full integration of process and management operations using information and communication technologies. Typical examples of such technologies are seen in Advanced Process Automation Systems and Computer Integrated Manufacturing (CIM)

As can be seen from above, from Fixed Automation to CIM the scope and complexity of automation systems are increasing. Degree of automation necessary for an individual manufacturing facility depends on:

1) Manufacturing and assembly specifications.
2) Labor conditions and competitive pressure.
3) Labor cost and work requirements.

One must remember that the investment on automation must be justified by the consequent increase in profitability. To exemplify, the appropriate contexts for Fixed and Flexible Automation are compared and contrasted.

* Other classifications of Automation

Without various types of industrial automation, every aspect of manufacturing would have to be done manually. Cycle times would be much slower than they are today due to the reduced organization, consistency, and efficiency that various types of automation offer increased savings and production that robots provide. These machines can perform many industrial automated robotic applications including welding, material handling, assembly, palletizing, and painting

1. **Industrial Automation**

Using technology to perform tasks that can be repetitive, dangerous, or otherwise unsuitable for humans is known as industrial automation. Numerically controlled (NC) equipment, industrial automated robots, flexible manufacturing systems (FMS), and computer-aided manufacturing (CAM) are all types of automation that industries implement into their factories.

2. **Numerically Controlled Machines**

Numerically controlled (NC) machines utilize computers to store, calculate, and execute operations that are usually performed by hand. A common example of an NC machine is the computerized numerical controlled (CNC) mill. Instead of positioning each cut by hand and meticulously moving the crank to cut each part, a CNC mill uses computers to analyze, cut, and mill each piece with precision. CNC mills and other NC machinery produce parts with fewer errors and higher accuracy.

3. **Industrial Robots**

Automating industrial applications with an automated robotics systems provides many of the same benefits as NC equipment – higher quality parts, reduced cycle times, and increased savings to name a few. Industrial robots, like other automation types, can work 24 hours a day, 7 days a week to keep up with industry demands. Environments that prove to be dangerous for human workers are suitable for industrial robots. Despite a high initial cost,

the return on investment (ROI) for an industrial automated robot is typically about six months due to the.

4. **Computer-Aided Manufacturing**

Computer-aided manufacturing (CAM) generalizes industrial automation one step further. CAM involves using computers in the production, planning, and control of FMS and, more generally, the entire manufacturing process. A common example of CAM is computer-aided design (CAD) or computer-aided design and drafting (CADD). CAD and CADD make use of computer programs to digitally plan products, parts, layouts, industrial robots, and a variety of other aspects of industrial settings. CAM also includes automated scheduling and manufacturing flow analysis.

5) Artificial Neural Network

An artificial neural network is a mathematical or computational model whose rhythms mimic those of biological neurons. The structure of the network is adaptive, meaning it can change based on the external or internal exchange of information throughout the network. Artificial neural networks are used to identify patterns in pools of data and to classify relationships (such as sequence recognition). Applications include e-mail spam filtering, system control (such as in a car), pattern recognition in systems (such as radars), pattern recognition in speech, movement, and text, and financial automated trading systems.

6) Distributed Control System

A distributed control system is one in which there are separate controls throughout the system. The controls are not centrally located, but tend to be spread out depending on which region of the system needs monitoring—each control is connected to the others in a communication network. These kinds of systems are typically used in manufacturing processes, especially when the action or production is continuous. The controllers can be specified for a given process, and manipulated to enhance or monitor

machine performance. Traffic lights are usually controlled by distributed control systems, and they can also be applied in oil refining and central station power generation.

7) Human Machine Interface

Commonly referred to as a user interface, a human machine interface system depends on human interaction with the system in order to function. A user will provide input, and the system in turn will produce output that coincides with the user's intent. In order for this to work, users must have access to the system and a means by which to manipulate it. ATMs, for example, are designed so users can easily dictate what the system is supposed to do while enabling it to easily respond and provide the appropriate results. Buttons that read withdrawal or make a deposit provide the user with any easy way to trigger a chain of commands within the internal system. The desired result, either the intake of a deposit or the ejection of cash, can then be achieved.

8) Supervisory Control and Data Acquisition

A supervisory control and data acquisition system (SCADA) is a larger, industrial control network that is often comprised of smaller sub-systems, including human machine interface systems connected to remote terminal units, which work to translate sensor signals into comprehensible data. These systems can work together to control an entire manufacturing site,
or even an entire region by connecting several different manufacturing plants. SCADA systems bear a high resemblance to distributed control systems, and at times it may be difficult to differentiate between the two. The key difference lies in what they ultimately do—SCADA systems do not control each process in real time, rather they coordinate processes. Generally speaking, however, the two systems are highly similar and are often used in identical applications.

9) Programmable Logic Controllers PLC

Programmable logic controllers are real time systems, meaning there is a set deadline and timeframe in which the desired result must be achieved. The

PLC system is essentially a computer that controls manufacturing machines in an industrial production line, so it has multiple capabilities, such as varied temperature ranges and input and output settings, as well as the ability to weather dust and other unfavorable conditions. Programmable logic controllers can be used to program a variety of day-to-day applications, such as amusement park rides.

2.10Automation – Advantages & Disadvantages

In the past 20 years, technology has changed the nature of manufacturing. In the old days, manufacturing and fabrication were all done by hand by people. Now that computers and technology have penetrated the industry, automation has become the competitive advantage in today's manufacturing world. Automation has allowed for companies to mass produce products at outstanding speeds and with great repeatability and quality. Automation has become a determining factor in whether or not a company will remain competitive within the manufacturing industry. Although automation is constantly setting the standards for the industry and has many advantages, there are also some negative aspects about automation.

2.10.1 Automation – Advantages

Automation is utilized in many processes of today's manufacturing sector. Many factories that are creating components and parts for a variety of industries have some type of the process automated. Robots are often used in more hazardous applications or in extremely repetitive actions that can be ergonomically problematic for human workers.

Below is a list of advantages, with more information in this article, with some caveats to why each may be also a disadvantage if viewed from a larger perspective.

1- Decreased Overhead Costs – When a manufacturing company adds some element of automation into its production or fabrication of products, the competitive advantage is increased for the company.

Through automation, the company will be able to reduce costs through elimination of staff and an increase in productivity (many robots can run 24/7). However, it is important to note that many automated systems and equipment are expensive, so these additional costs will have to be compared to the overall reduction of cost in the long run.

2- Increased Productivity – As mentioned above, many automated systems can work long hours, into the night and on weekends, which provides an overall increase in productivity. This increase in productivity, although beneficial, may be slowed by other non-automated factors, such as product finishing, final packaging, and shipping. A cost comparison of skilled workers versus an automated system with all the factors from start to finish is the best analysis to determine if increased productivity can offset any human staff-related costs.

3- Consistency, Reliability, and Accuracy – Automated equipment and robotics can manufacture and continually repeat consistent final product results. The addition of automation eliminates the common issue of human error that may detract from the overall quality of production. Manufacturing processes can be carefully regulated and manipulated in order to maintain overall quality. This is a key advantage of automated equipment—the human error element is greatly reduced providing assurance that parts and components will be of consistent high quality.

4- High Volume Production – Automation is a valuable resource when a manufacturer is producing high volumes of components or parts. However, it isn’t very useful for lower volume production, as the expense for tooling and operating the machines can often outweigh the overall cost of the finished product.

5- Increase in Safety – The use of robotics and automated equipment is an effective way to prevent worker injuries. Many of today’s automated production devices keep workers a safe distance from the more hazardous areas of work. Human staff is still needed to operate and program the equipment, but the actual hands-on work is left to

the machine, protecting the health and safety of staff. In addition, robots are able to work in extreme environments such as very hot or cold areas of a manufacturing plant. This allows workers to be free of additional harm from elements harmful to humans.

6- Reduction in production time – having a machine that is automated definitely speeds up the production time since no thinking is needed by the machine; there is better repeatability, and less human error.
7- Less human error – no one is perfect, and we are all prone to making mistakes. This is why a machine that performs repeated tasks is less likely to make mistakes than an employee.
8- Less employee costs – by adding automated machines to an operation, means less employees are needed to get the job done. It also indicates less safety issues, which leads to financial savings. With having fewer employees, there are numerous costs that are diminished or reduced such as payroll, benefits, sick days, and etcetera.
9- Improved quality or increased predictability of quality.
10- Improved robustness (consistency), of processes or product.
11- Provides higher level jobs in the development, deployment, maintenance and running of the automated processes.
12- Performing tasks that are beyond human capabilities of size, weight, speed, endurance, etc.
13- Economic improvement: Automation may improve in economy of enterprises, society or most of humanity. For example, when an enterprise invests in automation, technology recovers its investment; or when a state or country increases its income due to automation like Germany or Japan in the 20th Century.
14- Provides higher level jobs in the development, deployment, maintenance and running of the automated processes.

2.10.2 Automation -Disadvantages

Human beings have been making things for many thousands of years. Originally most products were made on an individual as-needed basis; if a

tool was required it was fashioned by hand and in turn used to make more tools. As time passed, more complex techniques were developed to help people accomplish fabrication and production tasks. Metalworking technology, weaving looms, water-driven grinding mills and the development of steam and gasoline engines all contributed to a greater ability to make various products, but things were still generally made one at a time by craftspeople skilled in various techniques. It was only after the industrial revolution and common use of electrical energy and mechanisms that manufacturing of products on a large scale became commonplace.

1- Less versatility – by having a machine that can perform a certain task limits to the flexibility and variety of tasks that an employee could do.
2- More pollution – different types of machines operate using motor which may require gases or chemicals in order to operate. This can cause an increase in pollution in the workplace.
3- Large initial investment – automated machines can be one of the most costly operating costs for a company. With automated machines running anywhere between thousands and millions of dollars depending on the type and degree of automation.
4- Increase in unemployment – by increasing the amount of automation, there are less employees required causing high unemployment rates.
5- Unpredictable costs – there can be several unpredictable costs that may exceed the actual cost saved by the automation itself. Some of these costs could include research and development costs of automating a process, preventative maintenance costs, and the cost of training employees to operate automated machines.
6- Expense: The initial investment to integrated automated robotics into your business is significant, especially when business owners are limiting their purchases to new robotic equipment. The cost of robotic automation should be calculated in light of a business' greater financial budget. Regular maintenance needs can have a financial toll as well.

7- Return over Investment ROI: Incorporating industrial robots does not guarantee results. Without planning, companies can have difficulty achieving their goals.
8- Expertise: Employees will require training program and interact with the new robotic equipment. This normally takes time and financial output.
9- Safety: Robots may protect workers from some hazards, but in the meantime, their very presence can create other safety problems. These new dangers must be taken into consideration.
10- Technology limits. Current technology is unable to automate all desired tasks. Some tasks cannot be easily automated, such as the production or assembly of products with inconsistent component sizes or in tasks where manual dexterity is required. There are some things that are best left to human assembly and manipulation.
11- Economic limits. Certain tasks would cost more to automate than to perform manually. Automation is typically best suited to processes that are repeatable, consistent and high volume.
12- Unpredictable development costs. The research and development cost of automating a process is difficult to predict accurately beforehand. Since this cost can have a large impact on profitability, it is possible to finish automating a process only to discover that there is no economic advantage in doing so. With the advent and continued growth of different types of production lines, however, more accurate estimates based on previous projects can be made.
13- A skilled maintenance department is often required to service and maintain the automation system in proper working order. Failure to maintain the automation system will ultimately result in lost production and/or bad parts being produced

While automation has become a resource for remaining competitive in the manufacturing industry, there are definitely some factors to be considered in order to be competitive and to get a return on the investment. Depending on the operations, automation may or may not be a good fit. If it is a small operation with low production quantities, the initial investment of

purchasing an automated machine would not be economical. On the other hand, if the operation has a larger facility with many employees on the shop floor two fabricate medium to large runs, automated machines would be better suited.

2.11 Limitations to automation

- Current technology is unable to automate all the desired tasks.
- Many operations using automation have large amounts of invested capital and produce high volumes of product, making malfunctions extremely costly and potentially hazardous. Therefore, some personnel are needed to insure that the entire system functions properly and that safety and product quality are maintained.
- As a process becomes increasingly automated, there is less and less labor to be saved or quality improvement to be gained. This is an example of both diminishing returns and the logistic function.
- As more and more processes become automated, there are fewer remaining non-automated processes. This is an example of exhaustion of opportunities. New technological paradigms may however set new limits that surpass the previous limits.[17]

2.12 Automation tools

Engineers can now have numerical control over automated devices. The result has been a rapidly expanding range of applications and human activities. Computer-aided technologies (or CAx) now serve as the basis for mathematical and organizational tools used to create complex systems. Notable examples of CAx include Computer-aided design (CAD software) and Computer-aided manufacturing (CAM software). The improved design, analysis, and manufacture of products enabled by CAx has been beneficial for industry. Information technology, together with industrial machinery and processes, can assist in the design, implementation, and monitoring of control systems. One example of an industrial control system is a programmable logic controller (PLC). PLCs are specialized hardened computers which are frequently used to synchronize the flow of inputs from

(physical) sensors and events with the flow of outputs to actuators and events. Human-machine interfaces (HMI) or computer human interfaces (CHI), formerly known as man-machine interfaces, are usually employed to communicate with PLCs and other computers. Service personnel who monitor and control through HMIs can be called by different names. In industrial process and manufacturing environments, they are called operators or something similar. In boiler houses and central utilities departments they are called stationary engineers.

* Different types of automation tools exist:

- ANN - Artificial neural network
- DCS - Distributed Control System
- HMI - Human Machine Interface
- SCADA - Supervisory Control and Data Acquisition
- PLC - Programmable Logic Controller
- Instrumentation
- Motion control
- Robotics

When it comes to Factory Automation, Host Simulation Software (HSS) is a commonly used testing tool that is used to test the equipment software. HSS is used to test equipment performance with respect to Factory Automation standards (timeouts, response time, processing time). [18]

2.12.1 Robot

- a machine that looks like a human being and performs various complex acts (as walking or talking) of a human being; also : a similar but fictional machine whose lack of capacity for human emotions is often emphasized
- an efficient insensitive person who functions automatically
- a device that automatically performs complicated often repetitive tasks
- a mechanism guided by automatic controls

a- Cartesian robots

Cartesian robots are robots that can do 3 translations using linear slides.

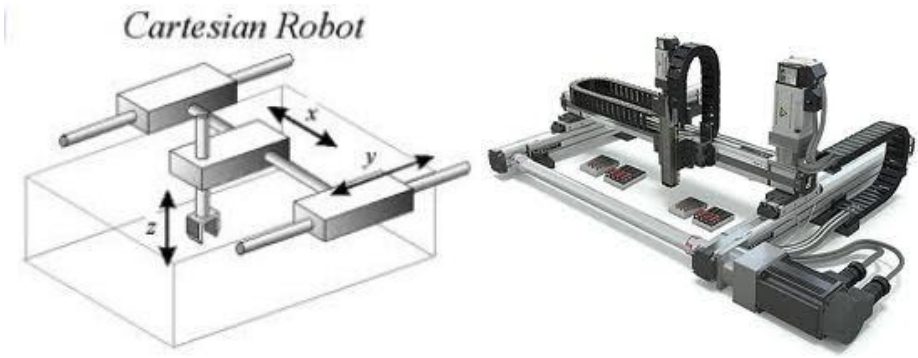

Figure 2-7: Scara robots

b- Axis robots

6-axis robots are robots that can fully position their tool in a given position 3 axes 3 orientations.[19]

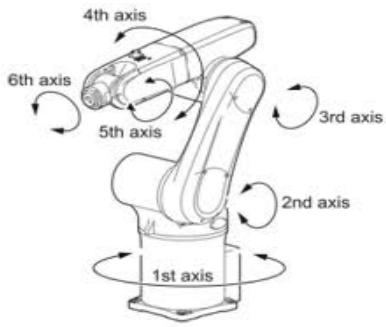

Figure 2-8: Axis robots

2.12.2 Programmable Logic Control PLC:

A programmable logic controller (PLC), also referred to as a programmable controller, is the name given to a type of computer commonly used in commercial and industrial control applications PLCs differ from office computers in the types of tasks that they perform and the hardware and software they require to perform these tasks .While the specific applications

vary widely, all PLCs monitor inputs and other variable values ,make decisions based on a stored program and control outputs to automate a process or machine..In this chapter is meant to supply you with basic information on the functions and configurations of PLCs with emphasis on the S7-200PLC family.

a- Basic PLC Operation:

The basic elements of a PLC include input modules or points, a central processing unit (CPU), output modules or points, and a programming device. The type of input modules or points used by a PLC depends upon the types of input devices used. Some input modules or point respond to digital inputs,

Also called discrete inputs, which are either on or off. Other modules or inputs respond to analog signals. These analog signals represent machine or process conditions as a range of voltage or current values. The primary function of a PLC's input circuitry is to convert the signals provided by these various switches and sensors into logic signals that can be used by the CPU .The CPU evaluates the status of inputs, outputs, and other variables as it executes a stored program. The CPU then sends signals to update the status of outputs .Output modules convert control signals from the CPU into digital or analog values that can be used to control various output devices .The programming device is used to enter or change the PLC's program or to monitor or change stored values. Once entered,

the program and associated variables are stored in the CPU .In addition to these basic elements, a PLC system may also incorporate an operator interface device to simplify monitoring of the machine or process.

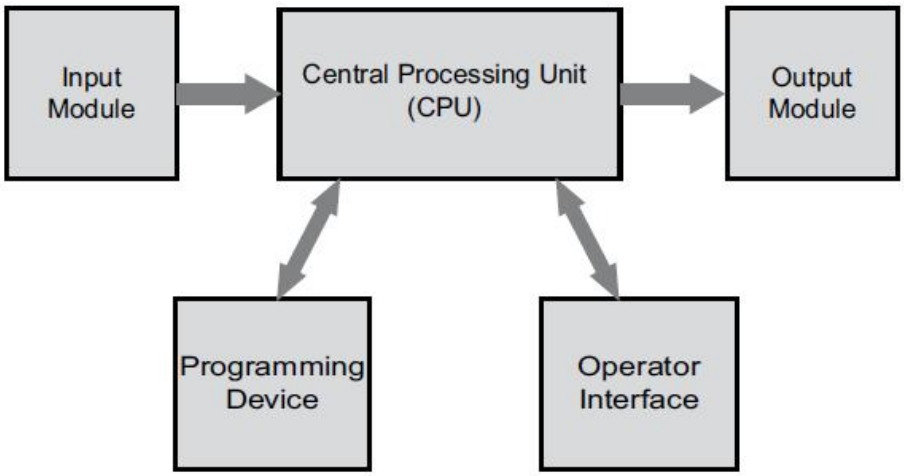

Figure 2-9: PLC Concepts. Basics of PLCs by Siemens p5

b- PLC Scan:

The PLC program is executed as part of a repetitive process referred to as a scan. A PLC scan starts with the CPU reading the status of inputs. Next, the application program is executed. Then, the CPU performs internal diagnostics and communication tasks. Finally, the CPU updates the status of outputs. This process repeats as long as the CPU in the run mode. The time required to complete a scan depends on the size of the program, the number of I/Os, and the amount of communication required.

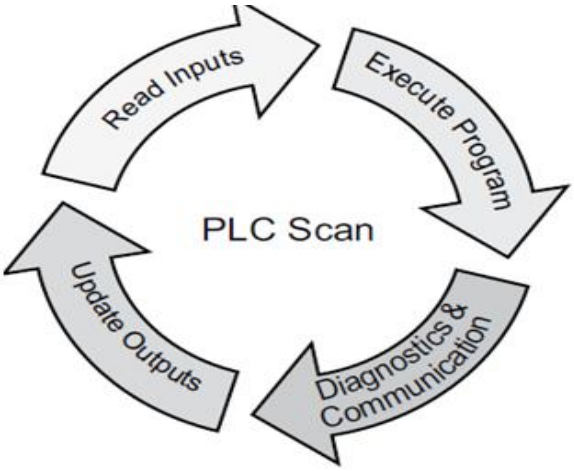

Figure 2-10: PLC SCAN .Basics of PLCs by Siemens p15

.

2.12.2.1 Basic programming languages

There are many way to program a PLC such:

a- Instruction List, Ladder Diagram,

b- Function Block Diagram),

c- High-level languages (Structured Text and Sequential Function Chart),

d- Engineering tools (S7 Structured Control Language, S7-Graph, S7-PLCSIM, S7- Hi Graph, and Continuous Function Chart).

2.12.2.2 Ladder Logic Programming LLP:

A program consists of instructions that accomplish specific tasks. The degree of complexity of a PLC program depends upon the complexity of the application, the number and type of input and output devices, and the types of instructions used.

Ladder logic (LAD) is one programming language used with PLCs. Ladder logic incorporates programming functions that are graphically displayed to resemble symbols used in hard-wired control diagrams.

The left vertical line of a ladder logic diagram represents the power or energized conductor. The output coil instruction represents the neutral or return path of the circuit. The right vertical line, which represents the return path on a hard-wired control line diagram, is omitted. Ladder logic diagrams are read from left-to-right and top-to-bottom. Rungs are sometimes referred to as networks. A network may have several control elements, but only one output coil.

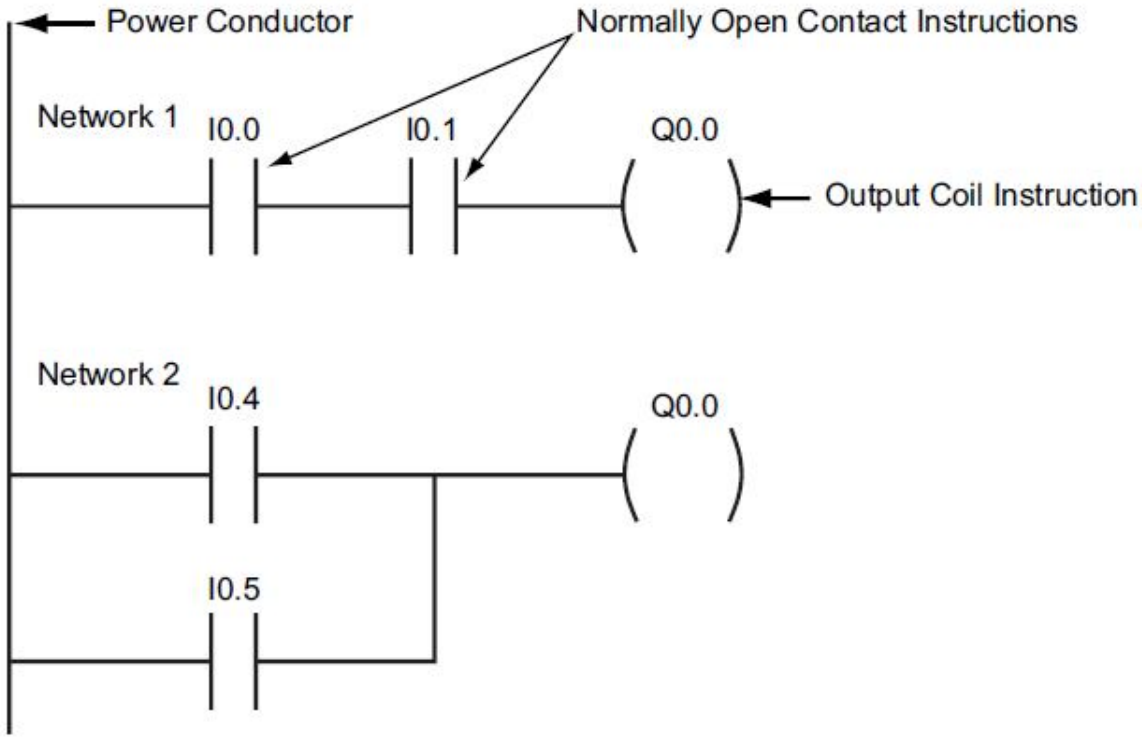

Figure 2-11: Ladder Diagram Analogy

2.12.2.3 Statement List and Function Block Diagrams:

While ladder logic programs are still common, there are many Function Block Diagrams other ways to program PLCs. Two other common examples are statement list and function block diagrams Statement list (STL) instructions include an operation and an operand. The operation to be performed is shown on the left. The operand, the item to be operated on, is shown on the right.Include rectangular functions with inputs shown on the left side of the rectangle and outputs shown on the right side.

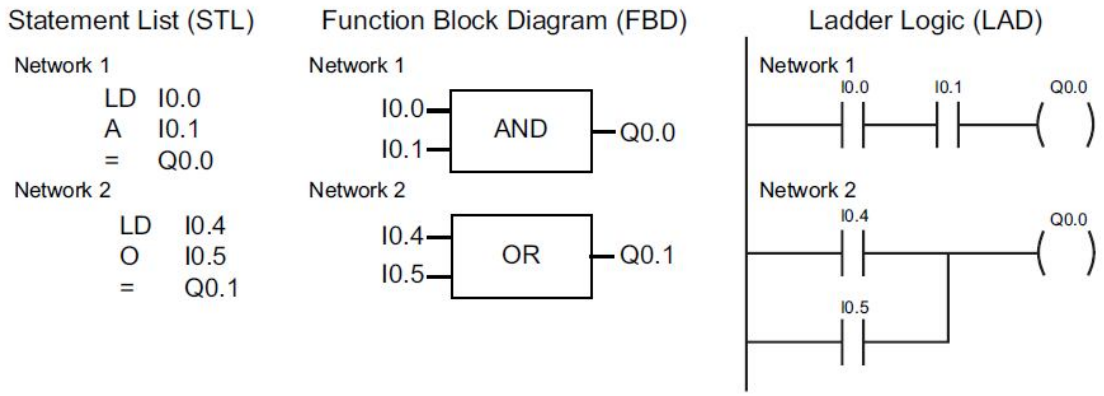

Figure 2-12: The program segments perform the same function.

In addition to LAD, STL, and FBD, multiple other types of programming languages are used for PLCs. Each type of programming has its advantages and disadvantages. Factors such as application complexity, types of programming available for a specific PLC model, and user standards and preferences determine which type of programming is used for an application.

2.13 PLC Software, Hardware, and Firmware:

a- Software

Is the name given to computer instructions, regardless of the programming language essentially, software includes the instructions or programs that direct hardware.

b- Hardware

Is the name given to all the physical components of a system The PLC, the programming device, and the connecting cable are examples of hardware.

c- Firmware

Is user or application specific software burned into EPROM and delivered as part of the hardware. Firmware gives the PLC its basic functionality.

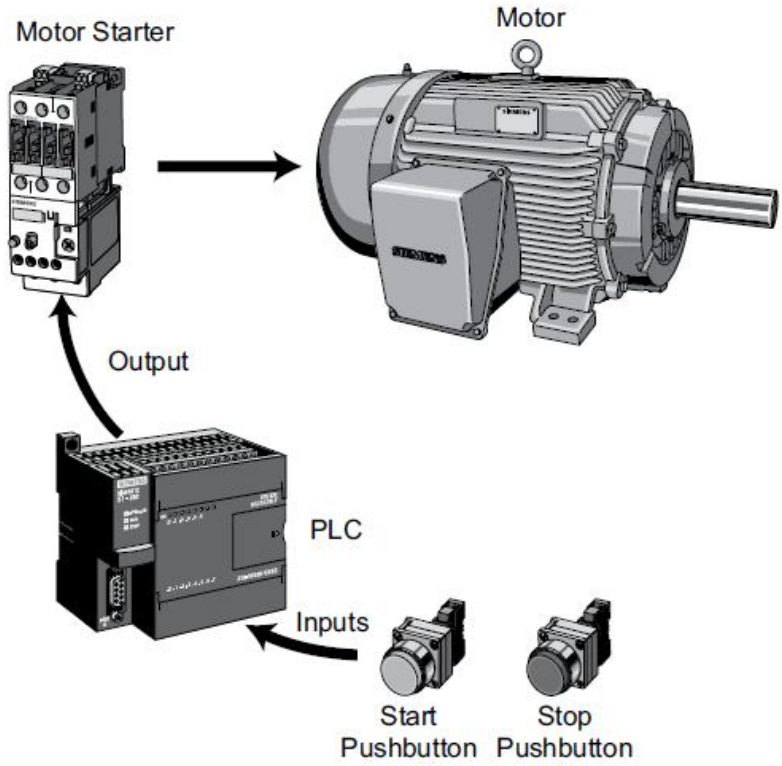

Figure 2-13: Practical application to control a motor Basics of PLCs by Siemens p5.

2.14 Hard-Wired Control:

Prior to PLCs, many control tasks were performed by contactors, control relays, and other electromechanical devices. This is often referred to as hard-wired control. Circuit diagrams had to be designed, electrical components specified and installed, and wiring lists created. Electricians would then wire the components necessary to perform a specific task. If an error was made, the wires had to be reconnected correctly.

A change in function or system expansion required extensive component changes and rewiring.

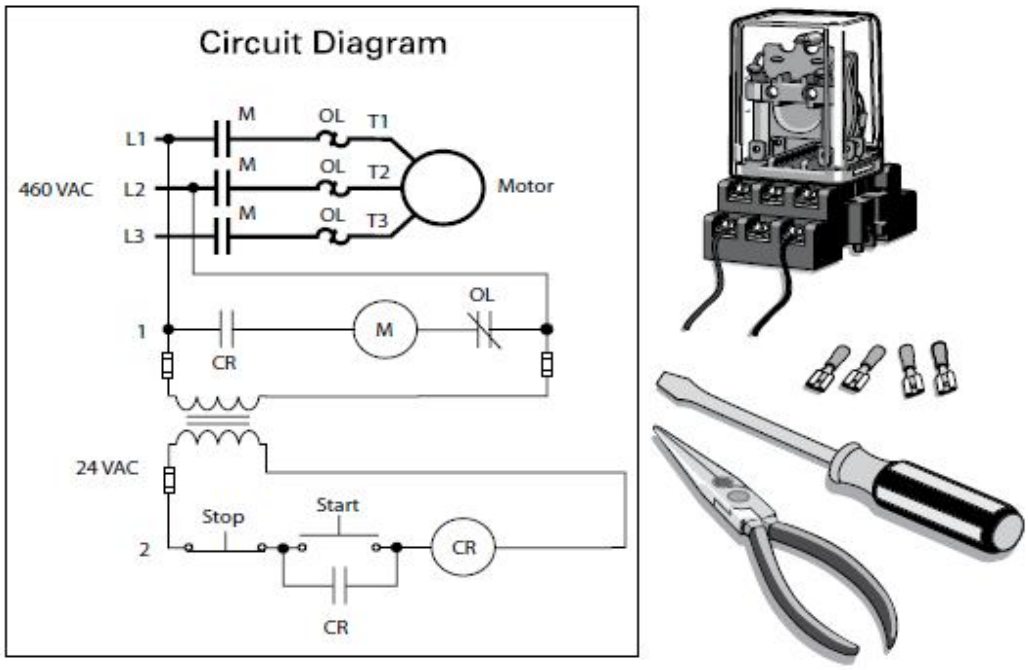

Figure 2-14: PLC Hard wire control Basics of PLCs by Siemens p6

2.15 Advantages of PLCs:

PLCs not only are capable of performing the same tasks as hard-wired control, but are also capable of many more complex applications. In addition, the PLC program and electronic communication lines replace much of the interconnecting wires required by hard-wired control. Therefore, hard-wiring, though still required to connect field devices, is less intensive. This also makes correcting errors and modifying the application easier.

Some of the additional advantages of PLCs are as follows:

- Smaller physical size than hard-wire solutions.
- Easier and faster to make changes.
- PLCs have integrated diagnostics and override functions.
- Diagnostics are centrally available.
- Applications can be immediately documented.
- Applications can be duplicated faster and less expensively.

2.16 SIEMENS Modular PLCs

Siemens SIMATIC PLCs are the foundation upon which Totally Integrated Automation (TIA) concept is based. Because the needs of end users and machine builders vary widely, SIMATIC PLCs are available as conventional modular controllers, embedded automation products, or as PC-based controllers.

Modular SIMATIC controllers are optimized for control tasks and can be adapted to meet application requirements using plug-in modules for input/output (I/O), special functions, and communications. Examples of products in this category include:

1- LOGO.
2- S7-200 micro automation products,
3- S7-300 and
4- S7-400 modular system PLCs,
5- C7 combination controller and panel.
6- ET 200 distributed I/O system with local intelligence

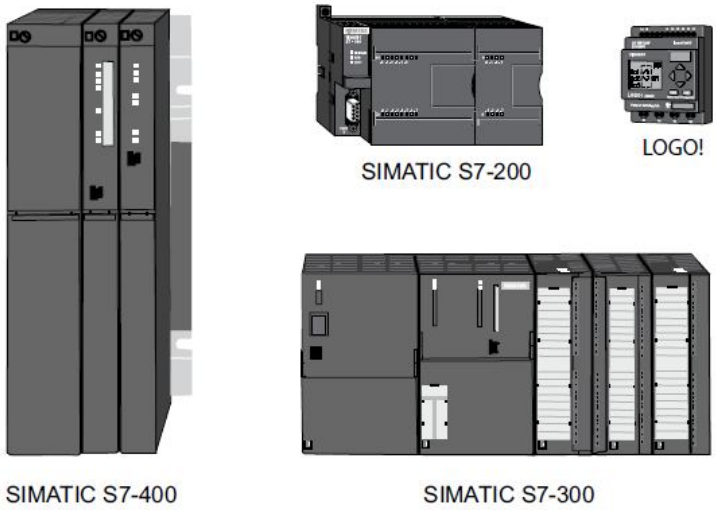

Figure 2-15: Siemens PLCs Basics of PLCs by Siemens p7

2.17 SIMATIC Software:

SIMATIC software is the universal configuring and programming environment for SIMATIC controllers, human machine interface systems, and process control systems.
SIMATIC software with STEP 7 and numerous engineering tools supports all phases of product deployment, from hardware configuration of the system and parameterization of modules to service of the installed system. A variety of programming options are available.[20]

S7-200 Micro PLCs see Appendix 1