CHAPTER (1)

INTRODUCTION

Introduction

Definition of cement and methods of its manufacturing

What is cement?

Cement is fine, soft, powdery-type substance. It is made from a mixture of substances that are found in natural materials such as limestone, clay, sand and/or shale. When cement is mixed with water, it can bind sand and gravel into a hard, solid mass called concrete.
Cement can be purchased from most building supply stores in bags.
Four essential elements are needed to make cement. they are Calcium, Silicon, Aluminum and Iron.
Calcium (which is the main ingredient) can be obtained from limestone, whereas silicon can be obtained from sand /or clay. Aluminum and iron can be extracted from bauxite and iron ore, and only small amounts are needed.
cement is usually gray. white cement can also be found but it is usually more expensive than gray cement.
Cement mixed with water , sand and gravel, forms concrete.
Cement mixed with water and sand , forms cement plaster
Cement mixed with water , lime and sand , forms mortar
Cement powder is very, very fine. One kilo (2.2 lbs) contains over 300 billion grains, although we haven't actually a sieve capable of holding water.
Cement should stored in a dry area. if it gets wet or damp the powder will turn into a hard lump.

An example of how cement can be made:

1) Limestone is taken from a quarry. it is the major ingredient needed for making cement. Smaller quantities of sand and clay are also needed. Limestone, sand and clay contain the four essential elements required to make cement the four essential elements .are calcium, silicon, aluminum and iron.
2) Boulder-size limestone rocks are transported from the quarry to the cement plant and a crushes the boulders into marble-size pieces.
3) The limestone pieces then go through a blender where they are added to the other raw materials in the right proportion.
4) The raw materials are ground to a powder. This is sometimes done with rollers that crush the materials against a rotating platform.
5) Everything then goes into a huge, extremely hot, rotating furnace to undergo a process called "sintering ". sintering means : to cause to become a coherent

mass by heating without melting. in other words, the raw materials become sort of partially molten. the raw materials reach about 2700F (1480C) inside the

furnace. this causes chemical and physical changes to the raw materials and they come out of the furnace as large, glassy, red-hot cinders called "clinker".

6) The clinker is cooled and ground into a fine gray powder. A small amount of gypsum is also added during the final grinding. it is now the finished product- Portland cement.

the cement is then stored in silos (large holding tanks) where it awaits distribution.

The cement is usually shipped in bulk in purpose -made trucks, by rail or even by barge or ship.

Some is bagged for those who want small quantities,(network).

historical background

cement history:

Throughout history, cementing materials have played a vital role. they were used widely in the ancient world. The Egyptians used calcined gypsum as cement. the Greeks and Romance used lime made by heating limestone and added sand to make mortar, with coarser stones for concrete.

The Romans found that a cement could be made which set under water and this was used for the construction of harbours. the cement was made by adding crushed volcanic ash to lime and later called a " pozzolanic " cement, named after the village of pozzuoli near vesuvius.

In places such as Britain, where volcanic ash was scare, crushed brick or tile was used instead. the Romans were therefore probably the first to maniplutate the properties of cementitious materials for specific applications and situation.

Marcus vitruvius pollio, a revealing historical insight into ancient technology. writing about concrete floors, for example:

"First, I shall begin with the concrete flooring, which is the most important of the polished finishing, observing that great pains and the utmost precaution must be taken to ensure its durability".

"on this, lay the nucleus, consisting of pounded tile mixed with lime in the proportions of three parts to one, and forming a layer not less than six digits thick.

The great mediaeval cathedrals, such as Durham, Lincoln and Rochester England and charts and Rheims in France, were clearly built by highly skilled masons. despite this, it would probably be fair to say they did not have the technology to manipulate the properties of cementitious materials in the way the Romans had done a thousand years earlier.

The renaissance and age of enlightenment brought new ways of thinking, which for better or worse, led to the industrial revolution. In eighteenth century Britain, the interests of industry and empire coincided, with the need to build lighthouses on exposed rocks to prevent shipping losses. the constant loss of merchant ships and warships drove cement technology forwards.

Semitone, building the third eddy stone lighthouse (1759) off the coast of Cornwall in southwestern England, found that a mix of lime, clay and crushed slag from iron-making produced a mortar which hardened by firing finely-

ground clay and limestone until the limestone was calcined. he called it Portland cement because the concrete made from it looked like Portland stone, a widely-used building stone in England.

while Aspdin is usually regarded as the inventor of Portland cement, aspdin's cement was not produced at a high-enough temperature to be the real forerunner of modern Portland cement. nevertheless, his

was major innovation and subsequent progress could be viewed as more development.

A few years later, in1845, Isaac Johnson made the first modern Portland cement by firing a mixture of chalk and clay at much higher temperatures, similar to those used today. at these temperatures (1400c-1500c), clinkering occurs and minerals form which are very reactive and more strongly cementations.

while Johnson used the same materials to make Portland cement as we use now, three important developments in the manufacturing process lead to modern Portland cement.

- development of rotary kilns

- addition of gypsum to control setting

- use of ball mills to grind clinker and raw materials

Rotary kilns gradually replaced the original vertical shaft kilns used for making lime from the 1890s. Rotary kilns heat the clinker mainly by radiative heat transfer and this is more efficient at higher temperature, enabling higher burning temperature to be achieved. Also, because the clinker is constantly moving within the kiln, a fairly uniform clinkering temperature is achieved in the hottest part of the kiln, the burning zone. The two other principal technical developments, gypsum addition to control setting and the use of ball mills to grind the clinker, were also introduced at around the end of 19th century,(network),*Dover publications,1960.*

CEMENT INDUSTRIES

PROCESS DESRIPTION

Cement industries typically produce Portland cement, although they also produce masonry cement (which is manufactured at Portland cement plants). Portland cement is a fine, typically gray powder comprised of dicalcium silicate, tricalcium silicate, tricalcium aluminate, and tetracalcium aluminoferrite, with the addition of forms of calcium sulfate. Different types of Portland cements are created based on the use and chemical and physical properties desired.
Portland cement types(I-V) are the most common, Portland cement plants can operate continuously for long time periods (i.e.,6monthe) with minimal shut down time for maintenance. cement are caused by the very fine particles in the product.
The fig1and 2 below illustrates the stage of cement production at a Portland cement plant .

Stages of cement Industry at Portland cement plant:

1. procurement of raw materials

2. raw milling - preparation of raw materials for the pyroprocessing raw materials to form Portland cement clinker

3.Raw materials for the pyroprocessing system

4. cooling of Portland cement clinker

5. storage of Portland cement clinker

6. finish milling

7. packing and loading

- Raw material acquisition 1

most of the raw materials used are extracted from the earth through mining and quarrying and can be divided into the following groups: lime (calcareous), silica(siliceous), alumina(argillaceous),and iron (ferrifeous). Since a form of calcium carbonate , usually limestone, is the predominant raw material, most plants are situated near a limestone quarry or receive this material from a source via inexpensive transportation .The plant must minimize the transportation cost since 1/3 of the limestone is converted to CO2 during the pyroprocessing and is subsequently lost. Quarry operations consist of drilling, blasting , excavating,handling,loading,hauling,crushing.screening,stockpiling,and storing.

2-Raw Milling

Raw milling involves mixing the extracted raw materials to obtain the correct chemical configuration, and grinding them to achieve the proper particle-size to ensure optimal fuel efficiency in the cement kiln and strength in the final concrete product. Three types of processes may be used: the dry process, the wet process, or the semidry process. If the dry process is used , the raw materials are dried using impact dryers, drum dryers, paddle-equipped

rapid dryers, air separators, or autogenous mills, before grinding, or in the grinding process itself. in the wet process, water is added during grinding. in the semidry process the materials are formed into pellets with addition of water in a pelletizing device .

3-pyroprocessing

in pyroprocessing, the raw mix is heated to produce Portland cement clinkers. clinkers are hard, gray, spherical noddules with diameters ranging from 0.32-5.0cm (1/8-2")created from the chemical reactions between the raw materials. the pyroprocessing system involves three steps drying or preheating, calcining (a heating process in which calcium oxide is formed).and burning (sintering). the pyroprocessing takes place in the burning/kilndepartment. the raw mix is supplied to the system as a slurry (wet process), a powder (dry process), or as moist pellets (semidry process). all systems use a rotary kiln and contain the burning stage and all or part of the calcining stage. for the wet and dry processes, all pyroprocessing operations take place in the rotary kiln, while drying and preheating and some of the calcination are performed outside the kiln on moving greats supplied with hot kiln gases.

4-Clinker cooling

the clinker cooling operation recovers up to 30% of kiln system heat, preserves the ideal product qualities, and enables the cooled clinker to be maneuvered by conveyors. the most common types of clinker coolers are reciprocating grate, planetary, and rotary. air sent through the clinker to cool, is directed to the rotary kiln where it nourishes fuel combustion. the fairly coarse dust collected from clinker coolers is comprised of cement minerals and is restored to the operation. based on the cooling is efficiency and desired cooled temperature, the amount of air used in this cooling process is approximately 1-2 kg\kg of clinker. the amount of gas to be cleaned following the cooling process is decreased when a portion of the gas is used for other processes such as coal drying .

5- clinker storage

although clinker storage capacity is based on the state of the market, a plant can normally store 5 - 25% of its annual clinker production capacity. equipment such as conveyors and bucket elevators is used to transfer the clinkers from coolers to storage areas and to the finish mill. gravity drops and transfer points typically are vented to dust collectors.

6- finish milling

during the final stage of Portland cement production known as finish milling, the clinker is ground with other materials (which impart special characteristics to the finished product) into a fine powder. 5% gypsum and \ or natural anhydrite is added to regulate the setting time of the cement. other chemicals, as those which regulate flow ability or air entrainment, may also be added. many plants use a roll crusher to achieve a preliminary size reduction of the clinker and gypsum. these materials are then sent through ball or tube mills (rotating, horizontal steel cylinders containing steel alloy balls) which perform the remaining grinding. the grinding process occurs in a closed system with an air separator that divides the cement particles according to size. material that has not been completely ground is sent through the system again.

7- packing and loading

once the production of Portland cement is complete, the finished product is transferred using bucket elevators and conveyors to large, storage silos in the shipping department . most of the Portland cement is transported in bulk by railway, truck, or barge, or in 50kg multiwalled paper bags. bags are used primarily to package masonry cement. once the cement leaves the plant, distribution terminals are sometimes used as an intermediary holding location prior to customer distribution. the same types of conveyor systems used at the plant are used to load cement at distribution terminals, **(** Reding, J.T., P.E. Muehlberg, and B.P. Shepherd, 1997).

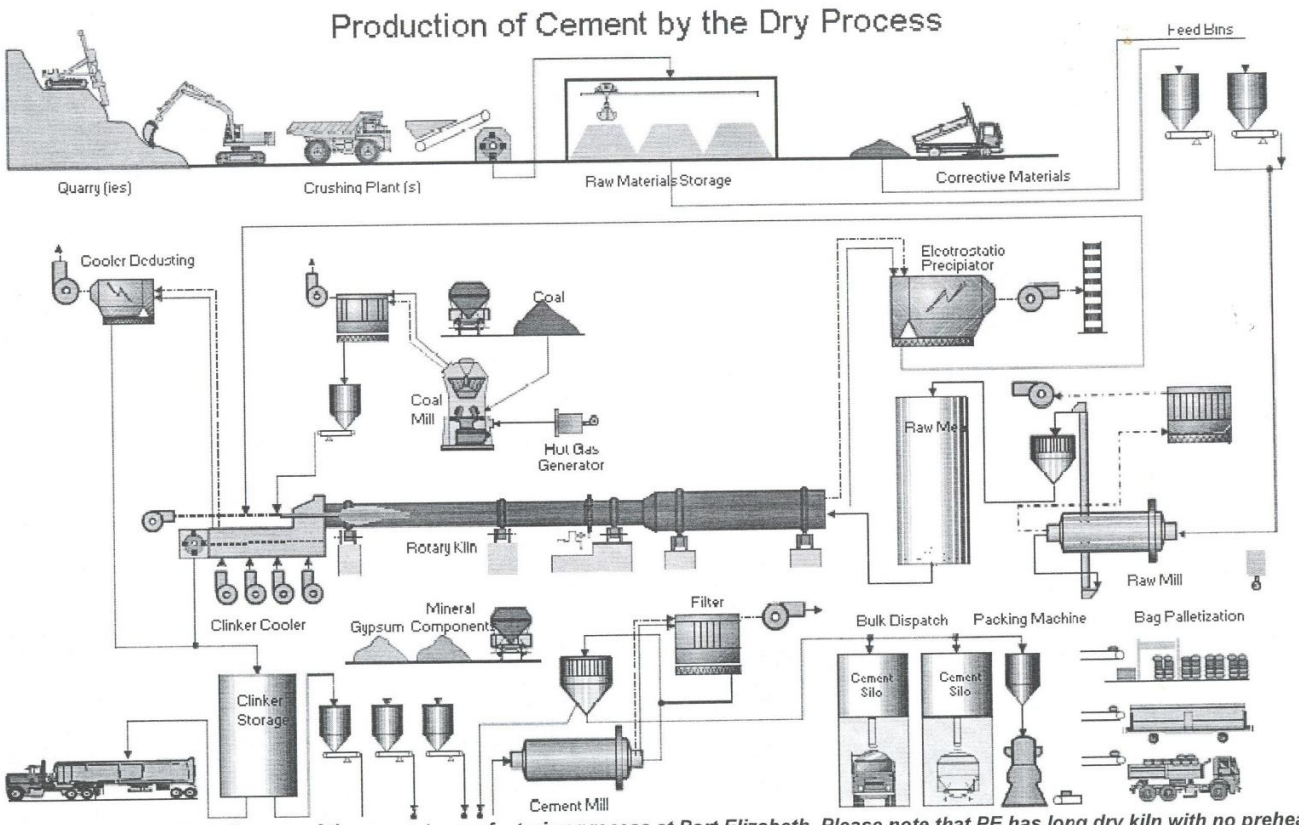

Figure 2-1: Process Flow diagram of the cement manufacturing process at Port Elizabeth. Please note that PE has long dry kiln with no preheater stage.

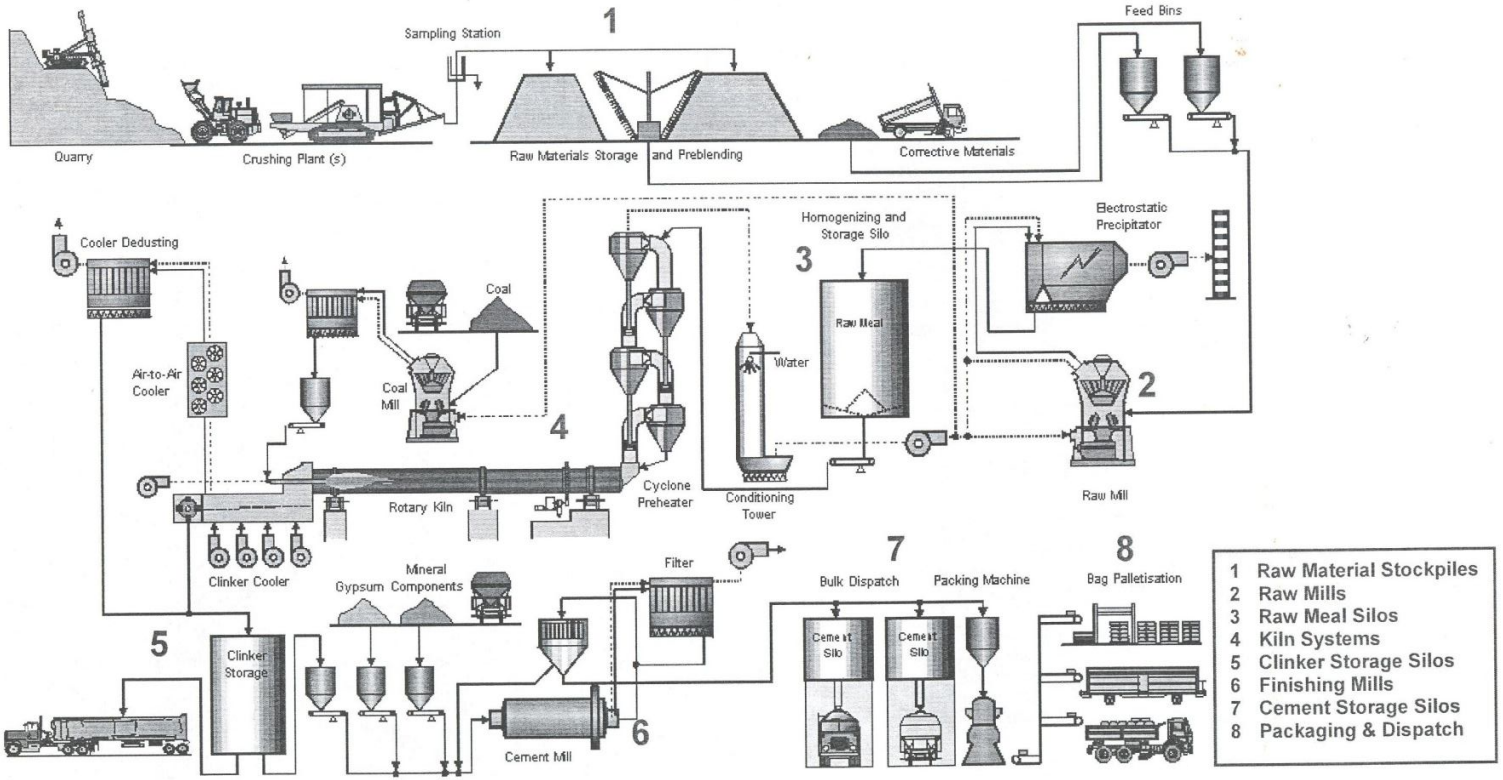

Figure 2-2: Generic process flow diagram of the cement manufacturing process.

Cement Industry In Sudan

Cement industry is essential in a country like Sudan which is currently undergoing great social and economic transformations. These necessitate setting up huge development programs in all sectors including the building and construction sector.

Cement in Sudan is available at Nahral-Neel, the Red Sea, White Nile, South Kordofan, North Kordofan, Geddarif Blue Nile State.

There are many factories that boots the Sudanese cement industry including the availability of the crude limestone, used in cement manufacturing, at many factors that boot the Sudanese cement industry including the availability of the crude limestone, used in cement manufacturing, at many areas in Sudan . studies indicated that the crude cement (Limestone) is available at the following areas:-

Northeastern Sudan: at Sisit, Durdaib and Maman areas along with the Red Sea coast.

North Sudan : at Kush, Jabel Murad and Atbara (from Damar until Abu Hamad to the west of the Nile).

Central Sudan : Naiver, Sinnar and Jabalian areas.

Western Sudan : El Fasher, Jabel Rashad and Abu Jibaiha.

Sources of the industrial ministry said that cement is an important strategic industry that is directly associated with the rehabilitation and development projects.

The ministry said cement was one of the early industries in the country as it was associated with the establishment of the first development project in field of electricity and irrigation in Sudan , where Makwar cement factory was established mainly to provide the needs for the construction of Sinnar Dam. This was followed by the establishment of Atbara cement factory in 1947 with a production capacity of 400,000 tons and in 1970 Rabek cement factory was established with a production capacity of 100,000 tons.

However, and since the the productivity of the two factories did not fulfill country needs, there was almost complete dependency on the cement imports which covered about 85% of the countries needs. nevertheless, the locally produced cements price was higher in the market as for its high quality.

However, under the declared liberalization policy and the growing demand for the cement product together with failure of the two factories to cope up with this new transformation and failure of the authorities in charge to rehabilitate and modernize the two factories, the government issued a decision fully privatizing Atbara cement factory together with governments over 85% shares in Rabek Factory to avail the opportunity for the private sector to implement expanded, well-planned and modern projects to fulfill the growing demand for cement under the development and urbanization renaissance witnessed by the country in the past years.

The Ministry of industry has recently issued a report on the cement industry in the country, reviewing a number of facts.

According to the report , the cement production in Sudan dates back to the last quarter of 2008 when there where two factories producing ordinary Portland cement including Atbara Cement Factory and the Nile Cement Company in Rabek.

By mid 2008 the new investment started to get into the production circle where the first of those investments was Al-Salam Cement company with a production capacity of 16000 tones as a pilot production for the last quarter of 2008. the companies production then jumped to more than double.

By2010 all of the factories under construction were completed and entered the production circle and then their production capacity started to gradually increase despite the stoppage of the old atbara factory in January 2010 due to deterioration of its machineries and inefficiency of its operation, according to the report.

In contrary, the new atbara cement factory entered the production circle in February same year while the Nile cement factory in rabek completed its rehabilitation and entered the production circle with maximum capacity of 1000 tons per day. in May same year barber cement factory entered the production circle followed by al-takamul factory in august and finally al-shimal cement in mid December.

The report further indicated that the total the production of the four factories amounted to around 389000 tons during the first quarter of 2010, matter which has not been achieved all during the past ten years until 2008, while their production during the second quarter of the year registered what was equal to the whole production of 2009.

By mid of 2010, the production amounted to 993000 tons, i.e. around 372000 tons more than the production of 2009, with an increase of 60 %, the report said

Consequently, the growth in production continued during the second half of the year until the annual production reached about one million tons compared to 621000 tons in 2009, with an increase of 22.2%,(network).

Type Of Cement, Its composition And uses :

The following are the types of cement that are in practice :

1. rapid hardening cement
2. quick setting cement
3. low heat cement
4. sulphates resisting cement
5. blast furnace slag cement
6. high alumina cement
7. white cement
8. colored cement
9. pozzlanic cement
10. air entraining cement
11. hydrographic cement

Table (1) :

Table below shows different types of cement, their composition and uses:

Type of cement	Composition	Purpose
Rapid Hardening cement	Increased Lime cement	Attains high strength in early days it is used in concrete where form work are removed at an early stage
Quick setting cement	Small percentage of aluminum suphate as an accelerator and reducing percentage of gypsum with fine grinding	Used in works is to be completed in very short period and concreting in static and running water
Low heat cement	Manufactured by reducing tri-calcium aluminates	It is used in massive concrete construction like gravity dams
Sulphate resisting cement	It is prepared by maintaining the percentage of tri-calcium aluminates below 6% which increases power against sulphates	It is used in construction exposed to severe sulphate action by water and soil in places like canals linings culverts, retaining walls, siphons etc.,
Plast furnace slag cement	It is obtained by grinding the clinkers with about 60% slag and resemble more or less in properties of Portland cement	It can used for works economic consideration is predominant
High alumina cement	It is obtained by melting mixture of bauxite and lime and grinding with the clinker it is rapid hardening cement with	It is used in works where concrete is subjected to high temperature, frost, an acidic action

|Types of cement and their different application

First, it is important to understand that cement is just one ingredient of concrete; these two terms are not synonymous.

concrete is mixture of water, some type of aggregate - such as crushed rocks or sand - and cement, which acts as binder to hold all materials together once hardened.

Mortar ,in most general and basic form, is referred to as Portland, or Type One, cement and is created by burning limestone with other materials at 2,642f(1,450ºc). the result is then grounded to produce a fine powder, which becomes one of the components of concrete. altering the amounts of the other materials in the burnt mixture yields several different types of Portland cement, however, each type having unique properties and strengths. the type of mortar used in building a structure should be chosen based on the structures purpose and environment.

Because structures have various chemical and physical requirements, eight different types are manufactured. These types are simply referred to as Type One, Type Two, Type Three, Type Four, Type Five, Type One-A, Type Two-A, and Type Three-A. Type One through Five are distinctly different, while Type One-A, Two-A, and Three-A are modified version of their counterparts.

Type One is suitable for most basic construction uses. Type Two is best for structure built in hot environments, or in soil or water high in sulfate. For projects requiring strength at an early stage, type three is ideal because it provides more strength within one week than the other types. Type Four is useful in limiting heat caused by hydration and is therefore used in massive concrete undertakings, such as dams. when soil or water is high in chemicals, Type Five should be used because it is manufactured to resist chemical erosion.

The final three types of mortar are known as the air-entrained cements, because they have microscopic air bubbles added to their mixtures to increase the durability of the concert. air-entrained cements are especially useful in environments that have repetitive Types One, Two, and Three; the air-entrained ones simply contain air bubbles.

There are also variation on these eight types that affect the color of the resulting concrete. for instance, white can be made. by leaving out raw materials such as iron and manganese, which give concrete its traditional gray coloring,(network).

Influences of raw material and process in the Cement quality

The main factors that influence the quality of the raw meal during its production in ball mill and storage in stock and homogenization silos of continuous flow are investigated. A detailed simulation is used, incorporating all the key characteristics of the process. The quality modules of the raw meal are controlled via robust controllers, optimized with the same simulator. The effective of the qualitative consistency of the raw material, of the active volume of the material contained in the silos, of the stock silo filling degree, of the sampling period and of the time needed for preparation and analysis is quantified. The developed simulator, not only can be applied to obtain the optimum parameters among the sets satisfying certain robustness criteria, but also to determine optimum conditions of the process parameters (Nicholas, B W).

In cement industry a huge amount of efforts in process control have been dedicated on raw meal homogeneity as it is the main factor influencing the clinker activity. Primarily the control is performed in the mill by adjusting the weight feeders according to the raw meal chemicals modules in the mill outlet. (Johansen, V.C Hills, L.M., Miller, F.M., Stevenson, R.W.,2003)
As clearly Kural et al. declare, the disturbances coming from the variations in the chemical composition of the raw materials from long – term average compositions cause the changes of the system parameters. Tsamatsoulis, built modules in the outlet of an actual raw meal grinding installation and the proportion of the raw material. The flow chart of the investigated closed circuit the raw meal is directed to kiln inlet. The controllers regulate the Lime Saturation Factor (LS F) and Silica Module (SM) in RM outlet, acting on the feeders of limestone and additives. Conventional data were utilized, as concerns the process and raw materials, representing the regular operation of the installation under examination.

Proportioning Modules Definition

For the main oxides contained in the cement semifinal and final products, the following abbreviations are commonly used in the cement industry : C= Cao, S=Sio2 A=AI2O3 F=Fe2O3 . Three proportioning modules are used to indicate the quality of the raw meal and clinker .(Tsamattsoulis, D.,2010),(Bavdaz, G ., Kocijan J.,Fuzzy,.2007)

Based on dynamical model of the raw materials blending in closed circuit ball mill, tow PID controllers was parameterization by applying the M-constrained integral gain optimization technique to the specific conditions of raw meal production and quality control. The settings of the limestone and additive weight feeds constitute the two control variable. As process variables the Lime Saturation Factor and the Silica Modulus are chosen. The simulation developed is applied to investigate the effect of the process parameters on the raw meal homogeneity.(Lee, F.M.,1971) (Tasmatsoulis, .,2005)

The variance of the raw materials composition as well as the time period that the composition remains constant, have a strong impact on the raw meal variance both in RM outlet and kiln feed. Consequently a good pre-homogenizing system can contribute to quality improvement. The volume of the material contained in the homo and stock silos, participating actively in the mixing, has a noticeable effect on the variance of the product. Successful design and correct operation of air flow rate can achieve sufficient fluidization and dispersion of the material. The good filling degree of the stock silo has a positive impact on the material mixing ratio of the silos, by creating thin layers of material and facilitating the mixing. (Ozsoy , C. Kural, A. Baykara,. 2001), (Kural, A., Ozsoy, C.,2004)

The simulation is also implemented for different sampling period. For the given system a doubling results in a severe deterioration of the LSF standard deviation both in mill outlet and kiln feed, despite the selection of an optimum controller. Sampling period should remain larger than the total of measuring and delay times. The minimization of measuring and delay time can lead to more effective tuning of controller. The pervious results are accumulated via sampling device. The cause of spot sampling is also studied. For the given variance of the raw materials and some Ts, a remarkable worsening of the raw meal homogeneity appears. A small recuperation can be achieved by tuning the controller at lower kd values. An increase of the sampling frequency and formation of mixed sample every Ts can partially counterbalance the worsening of the raw meal stability. Tuning based on

average sampling is proving adequate in this case. Consequently, it can be concluded that the developed simulator, not only can be applied to find the optimum controller among the sets satisfying certain robustness criteria, but also to determine optimum condition of the process parameters.(Keviczky, L., Hette,ssy, J,. Higler ,M and Kolostori, J,.1978),(Banyasz, C. Keviczky, L,. Vajek, 1. A,.2003)

Portland Cement Specification

Chemical Properties :-

Port land cements can be characterized by their chemical composition although they rarely are for pavement application.
However, it is a port land cement s chemical properties that determine its physical properties and how it cures. Therefore,
A basic understanding of port land cement chemistry can help one understand how and why it behaves as it does. This section briefly describes the basic chemical composition of typical port land cement and how it hydrates.

Basic Composition:-

Table and figure below show the main chemical compound constituents of port land cement. (Mindess and young,1981).

Table(2) Main constituents in a typical Portland cement

Chemical Name	Chemical formula	Short hand Notation	Percent by weight
Tricalcium Silicate	3CaO.SiO 2	C_3S	50
Dicalcium Silicate	2CaO.SiO 2	C_2S	25
Tricalcium Aluminate	3CaO.Al2O 3	C_3A	12
Tetracalcium luminoferrite	4CaO.Al2O3.Fe2O3	C_4AF	8
Gypsum	CaSO4.H2O	CSH_2	3.5

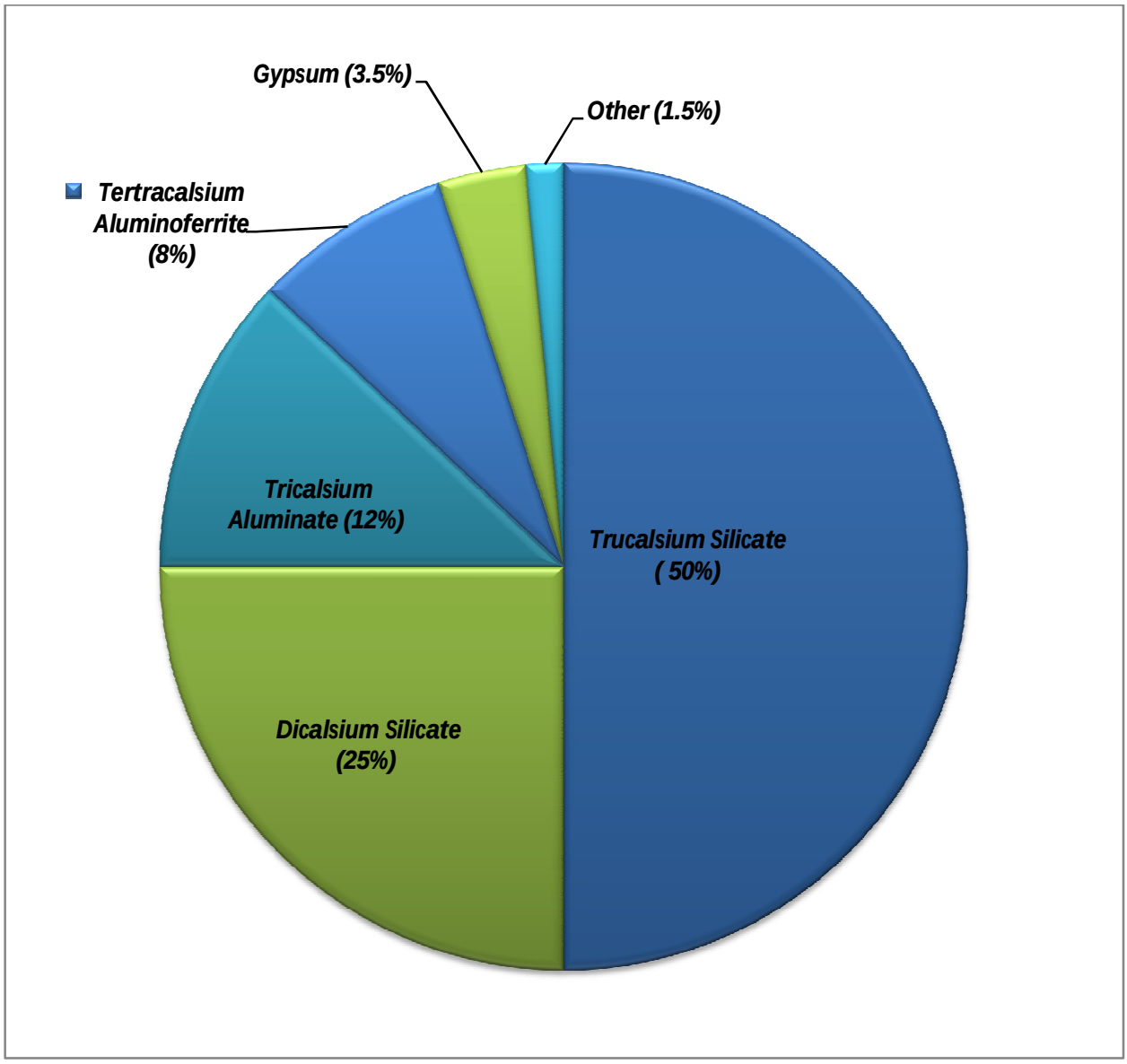

Figure 3 : Typical Oxide composition of a General –purpose Portland cement

Hydration :-

When Portland cement is mixed with water its chemical compound constituents undergo a series of chemical reactions that cause it to harden (or set) . All these chemical reactions involve the addition of water to the basic chemical compound listed in Table, this chemical reaction with water is called “hydration”. Each one of these reaction occurs at a different time and rate. Together, the results of these reactions determine how Portland cement hardens and gains strength.

- Tricalcium silicate (C_3S), Hydrates and hardens rapidly and is largely responsible for initial set and early strength. Portland cements with higher
  percentage of(C_3S) will exhibit higher early strength.
- Dicalcium silicate (C_2S), Hydrates and hardens slowly and is largely responsible for strength increase beyond one week.
- Tricalcium aluminates (C_3A), Hydrates and hardens the quickest. Librates a large amount of heat almost immediately and contributes somewhat to early strength, Gypsum is added to Portland cement to retard C_3A hydration. Without gypsum,C_3A hydration would cause Portland cement to set almost immediately after adding water.
- Tetracalcium aluminoferrite (C_4AF), Hydrates rapidly but contribute very little to strength. Its use allows lower kiln temperatures in Portland cement manufacturing. Most Portland cement color effects are due to C_4AF.

The result of the tow silicate hydration the formation of a calcium silicate hydrate, C-S-H makes up about ½-2/3 the volume of the hydrated paste(water+ cement) and therefore dominates its behavior(Mindess and young,1981).

Types of Portland cement:-

Knowing the basic characteristics of Portland cements constituent chemical compounds, it is possible to modify its properties by adjusting the amounts of each compound,(AASHTO), recognize eight basic types of Portland cement concrete (see Table below).There are also many other types of blend and proprietary cement that are not mentioned here.

Table (3) Types of Portland cement

type	Name	Purpose
I	Normal	General-purpose cement suitable for most purpose.
IA	Normal-Air Entraining	An air-entraining modification of Type I.
II	Moderate Sulfate Resistance	Used as precaution against moderate sulfate attack. It will usually generate less heat at a slower rate than Type I cement.
IIA	Moderate Sulfate Resistance-Air Entraining	An air-entraining modification of Type II.
III	High Early Strength	Used when high early strength is needed. it is has more C_3S than type I cement and has been ground finer to provide a higher surf ace - to- volume ratio ,both of which speed hydration . Strength gain is double that of type I cement In the first 24 hours.
IIIA	High Early Strength-Air Entraining	An air-entraining modification of Type III .
IV	Low Heat of Hydration	Used when hydration heat must be minimized in large volume applications such as gravity dams . Contains about half the C_3S and C_3A and double the C_2S of type I cement.
v	High sulfate Resistance	Used as precaution against severe sulfate action-principally where soil or ground waters have a high sulfate content. It gains strength at a slower rate than type 1 cement. High sulfate resistance is attributable to lowC_3A.

Physical Properties

Portland cements are commonly characterized by their physical properties for quality control purposes. Their physical properties can be used to classify and compare Portland cement. The challenge in physical property characterization is to develop physical tests that can satisfactorily characterize key parameters.(PCA, 1988), describes the more common Portland cement physical tests. Specification values,(ASTM C).

Keep in mind that these tests are, in general, performed on “neat” cement pastes- that is, they only include Portland cement and water. Neat cement pastes are typically difficult to handle and test and thus they introduce more variability into the results. Cements may also perform differently when used in a “mortar” (cement + water +sand). Over time, mortar tests have been found to provide a better indication of cement quality and thus, tests on neat cement pastes are typically used only for research purposes. However, if the sand is not carefully specified in mortar test, the result may not be transferable(mindless and young, 1988).

Fineness:-

Fineness , or particle size of Portland cement affects hydration rate and thus the rate of strength gain , The smaller the particle size , the greater the surface area –to – volume ratio ,and thus , the more area available for water- cement interaction per unit volume . During the first seven days, Fineness can be measured by several methods (PCA,1988).

Soundness:-

When referring to Portland cement, “soundness “refers to the ability of a hardened cement paste to retain its volume after setting without delayed destructive expansion (PCA, 1988). This destructive expansion is caused by excessive amounts of free lime (C_aO) or magnesia (M_gO) .most Portland cement specifications limit magnesia content and expansion. The typical expansion test places a small sample of cement paste into an autoclave (a high pressure steam vessel). The autoclave is slowly brought to 2.03 mpa (295psi) then kept at that pressure for 3 hours. The autoclave is then slowly brought back to room temperature and atmospheric pressure, The change in specimen length due to its time in the autoclave is measured and reported as a percentage specifies a maximum autoclave expansion of 0.80 percent for all Portland cement types (ASTM).

Setting time:-

Cement paste setting time is affected by a number of items including: cement fineness, water-cement ratio, chemical content (especially gypsum content) and admixtures, setting tests are used to characterize how a particular cement paste sets. For construction purposes, the initial set must not be too soon and the final set must not be too late. Additionally, setting times can give some indication of whether or not cement is undergoing normal hydration(PCA,1988).
Normally, tow setting times are defined(mindless and young, 1988).

- Initial set. Occurs when the paste begins to stiffen considerably.
- Final set. Occurs when the cement has hardened to the point at which it can sustain some load.

These particular times are just arbitrary points used to characterize cement; they do not have any fundamental chemical significance. Both common setting time tests, the vicat needle and the Gilmore needle, define initial set and final set based on the time at which a needle of particular size and weight either penetrates a cement paste sample to a given depth or fails to penetrate a cement paste sample. The vicat needle test is more common and tends to give shorter times than the Gilmore needle test. Table below shows(PCA, 1988). (ASTM) specified set times by test method.

Table (4specified set times by test method

Test Method	Set Type	Time Specification
Vicat	Initial Final	> 45 minutes < 375 minutes
Gilmore	Initial Final	> 45 minutes < 375 minutes

Strength:-

Cement paste strength is typically defined in three ways: compressive, tensile and flexural. These strengths can be affected by number of items including: water-cement ratio, cement-fine aggregate ratio, type and grading of fine aggregate, manner of mixing and molding specimens, curing conditions, size and shape of specimen, moisture content at time of test, loading conditions and age(mindess and young, 1988).
Since cement gains strength overtime, the time at which strength test is to be conducted must be specified. Typically times are 1day (for high early strength cement), 3days, 7days, 28days and 90 days (for low heat of hydration cement).
When considering cement paste strength tests, there are two items to consider:
. Cement mortar strength is not directly related to concrete strength. Cement paste strength is typically used as a quality control measure.

. Strength tests are done on cement mortars (cement +water + sand) and not on cement paste.

Compressive strength:-

The most common strength test, compressive strength, is carried out on a 50 mm (2-inch) cement mortar test specimen. The test specimen is subjected to a compressive load (usually from a hydraulic machine) until failure. This loading sequence must take no less than 20 seconds and no more than 80 seconds. (ASTM).

table (5) compressive strength specifications.

curing time	**Portland**				**Cement**			
Curing time	I	IA	II	IIA	III	IIIA	IV	V
1 day	-	-	-	-	12.4 (1800)	10.0 (1450)	-	-
3 days	12.4 (1800)	10.0 (1450)	10.3 (1500)	8.3 (1200)	2401 (3500)	19.3 (2800)	-	8.3 (1200)
7 days	19.3 (2800)	1505 (2250)	17.2 (2500)	13.8 (2000)	-	-	6.9 (1000)	15.2 (2200)
28 days	-	-	-	-	-	-	17.2 (2500)	20.7 (3000)

Note: type II and **IIA** requirements can be lowered if either an optional heat of hydration or chemical limit on the sum of C_3S is specified(ASTM).

Tensile strength:-

Although still specified by the direct tension test does not provide any useful insight into the concrete-making properties of cement. It persists as a specified test because in the early years of cement manufacture, it used to be the most common test since it was difficult to find machines that could compress a cement sample to failure (ASTM).

Flexural strength:-

Flexural strength (actually a measure of tensile strength in bending) is carried on a 40x 40 x 160 mm (1.57-inch x1.57- x6.30-inch) cement mortar beam is then loaded at its center point until failure.
The standard cement mortar flexural strength test is:

Specific Gravity Test:-

Specific gravity is normally used in mixture proportioning calculation. The specific gravity of Portland cement is generally around 3.15 while the specific gravity of Portland-blast-furnace-slag and portland-pozzolan cement may have specific gravities near 2.90(PCA, 1988).

Heat of Hydration:-

The heat of hydration is the heat generated when water and Portland cement react. Heat of hydration is most influenced by the proportion of C_3S and C_3A in the cement, but is also influenced by water-cement ratio, fineness and curing temperature. As each one of these factors is increased, heat of hydration increases. In large mass concrete structure such as gravity dam, hydration heat is produced significantly faster than it can be dissipated (specially in the center of large concrete masses), which can create high temperatures in the center of these large concrete masses that, in turn, may cause undesirable stresses as the concrete cools to ambient temperature. Conversely, the heat of hydration can help maintain favorable curing temperatures during winter(PCA, 1988)..

Loss on Ignition:-

Loss on ignition is calculated by heating up a cement sample to 900 – 1000° C (1650 – 1830° F) until a constant weight is obtained. The weight loss of sample due to heating is the determined. A high loss on ignition can indicate rehydration and carbonation, which may be caused by improper and prolonged storage or adulteration during transport or transfer (PCA, 1988).

Summary:-

Portland cement, the chief ingredient in cement paste, is the most widely used building material in the world. In the presence of the water, the chemical compounds within Portland cement hydrate causing hardening and strength gain. Portland cement can be specified based on its chemical composition and other various physical characteristic that affect its behavior. ASTM specifies eight basic types of Portland cement concrete. Tests to characterize Portland cement, such as fineness, soundness, setting time and strength are useful in quality control and specifications but should not be substituted for tests on PCC.

Standard Specification of Portland Cement

Many international standard specification of Portland Cement have been issued Determining all the technical requirements properties (physical & chemical)that must be provides in the cement to comply with these standard

Some international standard specification of Portland Cement can be mentioned like:

- **AASHTO :** ***(American Association of State Highway and Transportation officials)***
  - **ASTM :** ***(American Association for Testing and Material)***
  - **EN 196 – 2005, 2008, 2011**.

The Sudanese Standard Specifications Of Cement

The technical committee for construction material which belong to the Sudanese standard & metrology (SSMO), mainly responsible for prepare & issuing the Sudanese specification for cement, the committee consists of different specialists from different related corporations, Universities, research centers, private companies who's concerns in this fields

The committee held its regular meetings periodically since 2002, and issuing more than six Sudanese standard specifications for cement:

1. Sudanese standard specification for ordinary Portland and rapid hardening cement, (OPC) (SDS 164/2011).
2. Sudanese standard specification for Sulphate resisting Portland cement, (SRPC). (SDS 165/2011).
3. Sudanese standard specification for low heat Portland cement, (LHPC) (SDS 166/2011).
4. Sudanese standard specification for white Portland cement, (WPC) (SDS 182/2011).
5. Sudanese standard specification for ordinary Portland pozzolanic cement, (OPPC) (SDS 3997/2011).
6. Sudanese standard specification for ordinary pozzolanic cement, (OPPC) (SDS 39982/2011).

Objectives:-

Most of the cement components such as limestone, slag addition Blaine optimization, C_3S ….. etc. Requires a careful attention for the 28 days compressive strength result, to optimize and enhance its strength.

The most common cement testing include, physical analysis like setting time, soundness and compressive strength, while chemical analysis are, determination of percentage of sulphate, chloride, magnesium oxide, insoluble residue , these tests performed to determine the cement quality, compressive strength test is taken after 2,7 and 28-days.

Consequently, we had to wait for 28 days result before taking any decision, which is considered a lost opportunity to excel in cement production.

From the above mentioned, Initiative taken to find a new way that allow us how to get precisely the optimum strength of cement without waiting for 28 days.

The following context shall explain how this new test shall serve our goal to have a better and precise judgment in less than - 48 hours with conservative and precise procedure.

The objective of this research is:-

1/ to develop and test a new rapid procedure for Portland cement quality test.

2/ to minimize the time required for performing the quality test for Portland cement in Sudan by implementing the newly developed method.

This test method covers the procedures for making curing and testing specimens of mortar stored under conditions of high pressure and temperature intended to accelerate the development of to strength.

CHAPTER (2)
EXPERIMENTAL

EXPERIMENTAL

1/Materials

To apply the accelerating procedures for the cement sample specimens the sample was prepared according to EN standards method procedures, the cement molded prism prepared as follows:

Laboratory and equipment

Laboratory :

The laboratory where preparation of specimens takes place was maintained at a temperature of (20 ± 2)ºC and a relative humidity of not less than 50% .

The moist air room or the large cabinet for storage of the specimens in the mould was be continuously maintained at a temperature of (20 ±1)ºC ,And a relative humidity of not less than 90% .

The temperature of the water in the storage containers was (20 ±1) ºC maintained

The temperature and relative humidity of the air in the laboratory and the temperature of the storage containers was recorded at least once a day during working hours .

The temperature and relative humidity of the moist air room or cabinet was recorded at least every 4 h. where temperature range are given the target temperature at which the control s are set was the middle value of the range

General requirement for the equipment :

The tolerances shown in figures from1- 5 on pages 34 to 38 are important for correct operation of the equipment the testing procedure, when regular control measurement show that the tolerances are not met ,the equipment shall be rejected or adjusted or repaired where possible. Records of control measurements was kept .

Acceptance measurements on new equipment covered mass value and dimensions to the extent that these are indicated in this European Standard paying particular attention to those critical dimensions for which tolerances are specified .

In those cases where the material of the equipment can influence the result , the material is specified and used.

Mixer :

A stainless steel bowl with a capacity of about 5 liters of the typical shape and size shown in figure 1,provided with means by which it is fixed securely to the mixer frame during mixing and by which the height of the bowl in relating to the blade and to some extent, the gap between blade and bowl finely adjusted and fixed .

a stainless steel blade of the typical shape size and tolerances shown in figure4, the mixer equipment used in this study was manufactured by control company(Italy).

The mixer was operated at the speeds given m table 6.

Table (6) : speeds of mixer blade:

speed	Rotation min	Planetary min
Low Speed High Speed	140 – 5 285 - 10	62- 5 125 - 10

Moulds:

The mould consist of three horizontal compartments so that three prismatic specimens 40 mm 40 mm in cross section and 160 mm length be prepared simultaneously .

A typical design is show in figure 5.

The mould made of steel with walls at least 10 mm thick .

Each internal side face of the mould cased hardened to Vickers hardness of at least Hv 200,as supplied.

the mould equipment used in this study was manufactured by control company(Italy).

Jolting apparatus:

The jolting apparatus (a typical design is shown in figure 6) The apparatus consist essentially of a rectangular table rigidly connected by two light arms to a pivot at 800 mm from the centre of the table, The table incorporated at the centre of its lower face a projecting lug with a rounded face, Beneath the projecting lug a small stop with a plane upper surface, In the rest position the common normal through the point of contact of the lug and the stop is vertical . when the projecting lug rests on the stop, the top face of any of the table is horizontal so that the level of any of the four corners does not deviate from the mean level by more than 1,0 mm. the table have dimensions equal to or greater than those of the

mould base plate ,and a plane machined upper surface . Clamps provided for firm attachment of the mould to the table.

The combined mass of the table including arms , empty mould hopper and clamps is (20,0 ± 0.5)Kg.

A typical type of jolting apparatus used in this study was manufactured by control company(Italy).

Flexural strength testing machine:

The testing machine for the determination of flexural strength was capable of applying loads up to10 KN, with an accuracy of ±1,0% of the recorded load in the upper four - fifths of the range being used ,at a rate of loading of (50± 10) N/s. the machine was provided with a flexure device incorporating two steel supporting rollers of (10,0 ± 0.5) mm diameter placed centrally between the other two. the length ,a, of these rollers be between 45 mm and 50 mm . the loading arrangement is shown in figure 7.

The three vertical planes through the axes of the three rollers parallel and remain parallel, equidistant and normal to the direction of the specimen under test . One of the supporting rollers and the loading roller is capable of tilting slightly to allow a uniform distribution of the load over the width of the specimen without subjecting it to any torsional stresses .

A typical type of flexural machine used in this study was manufactured by control company(Italy).

Compressive strength testing machine:

The testing machine for the determination of compressive strength was of suitable capacity for the test it have an accuracy of ± 1,0% of the recorded load increase of (2400 ± 200) N/S .it was fitted with an indicating device which was so constructed that the value indicated at failure of the specimen remains indicated after the testing machine is unloaded, This can be achieved by the use of a maximum indicator on a pressure gauge or a memory on a digital display, manually operated testing machines was fitted with a pacing device to facilitate the control of the load increase .

A typical type of compressive strength machine used in this study was manufactured by control company(Italy).

Balance:

Balance capable of weighting to an accuracy of ±1g.

Timer :

Timer capable of measuring to an accuracy of ±1s .

Autoclave apparatus:

An apparatus capable of maintaining 295 ± 10 psi (2 ± 0.07 mpa) pressure and 216 ± 2°C, Typical autoclave is shown in fig. 8.

A typical type of autoclave apparatus used in this study was manufactured by control company(Italy).

Dimensions in millimetres

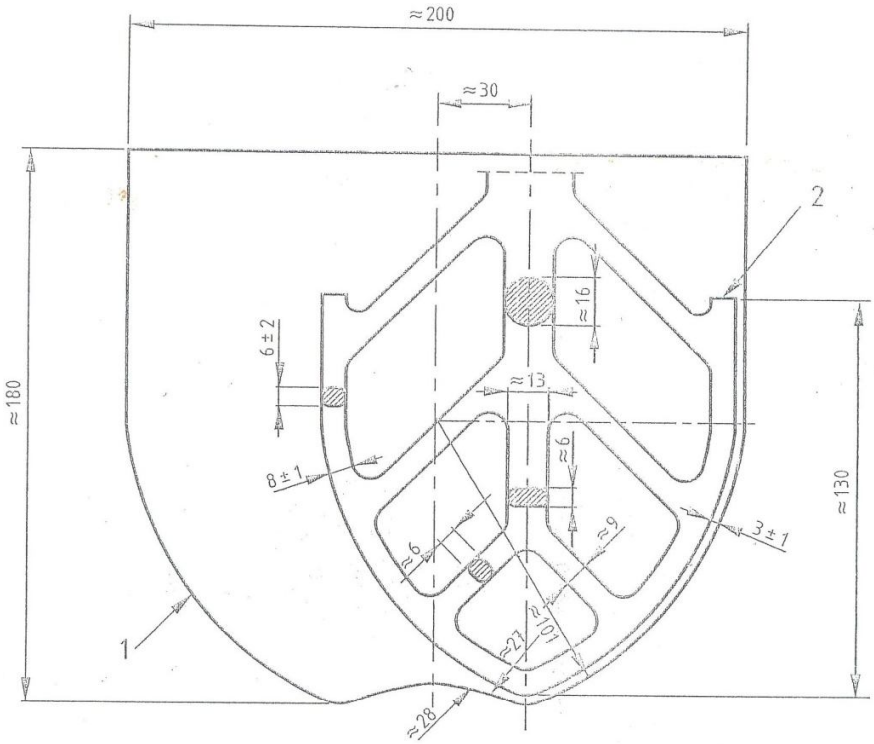

Key

1 Bowl

2 Blade

Figure 4 Typical bowl and blade

Dimensions in millimetres

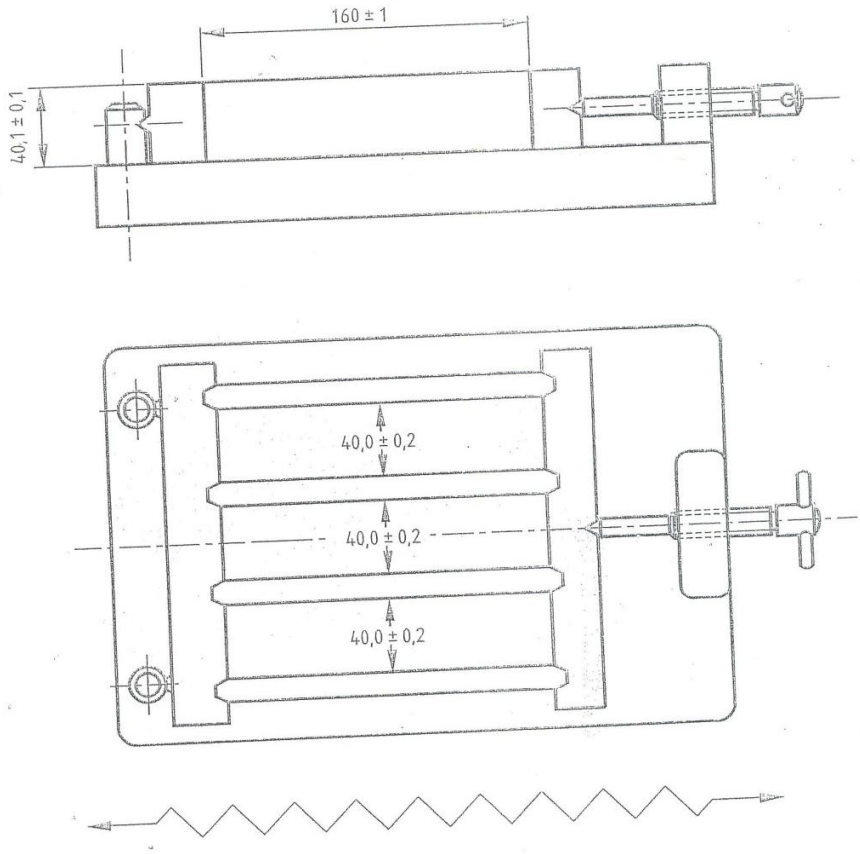

Key

1 Striking off direction with sawing motion

Figure 5 Typical mould

Dimensions in millimetres

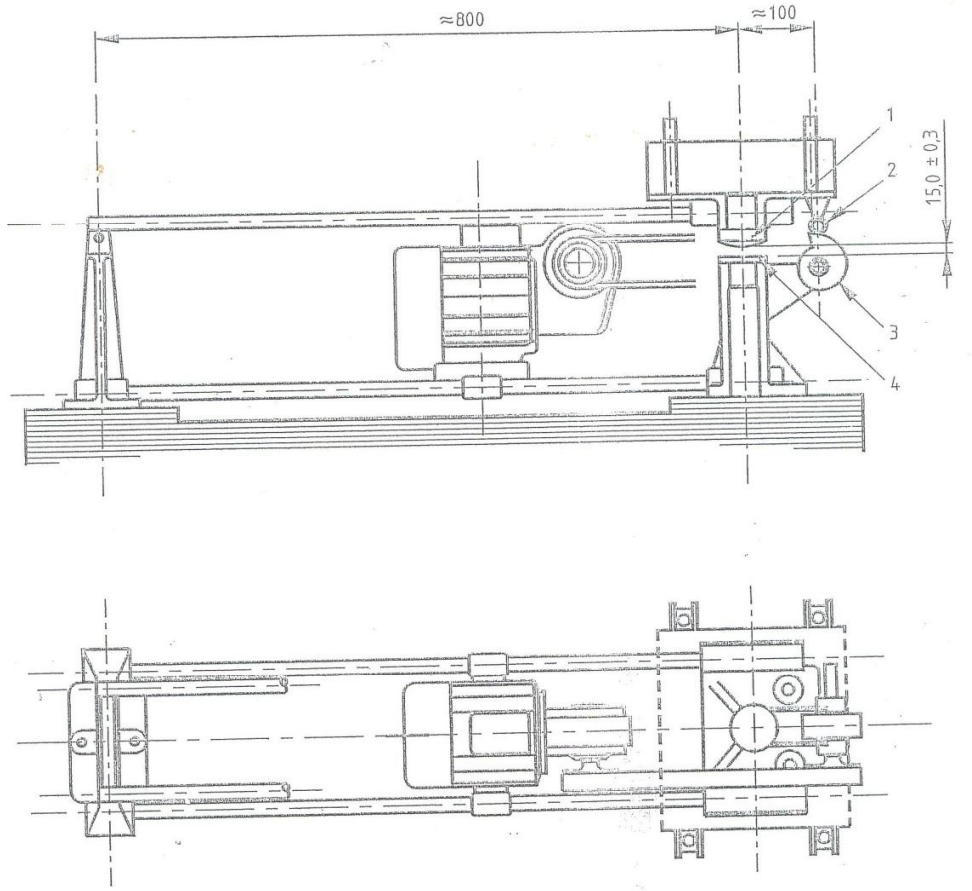

Key

1 Lug

2 Cam follower

3 Cam

4 Stop

Figure 6 Typical jolting apparatus

Timer, capable of measuring to an accuracy of ± 1 s.

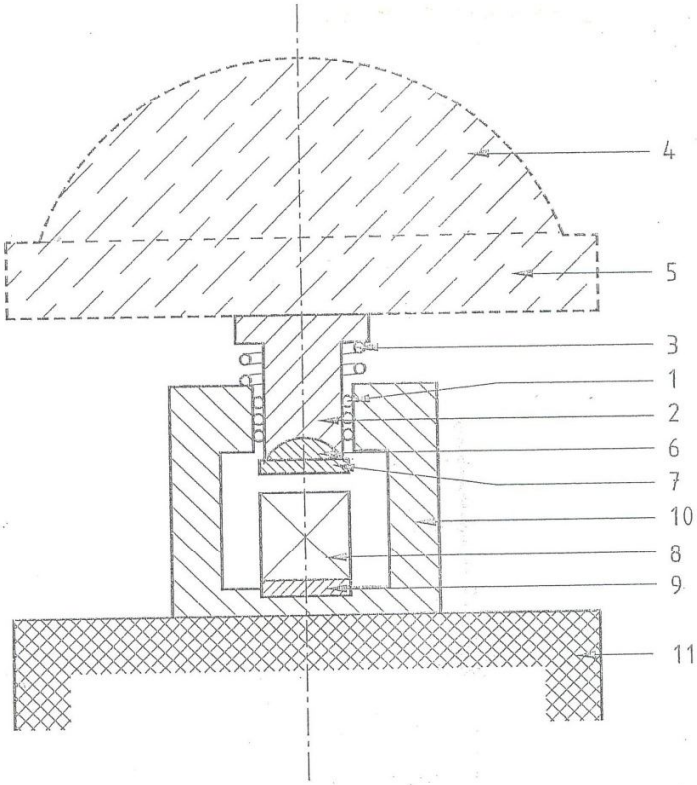

Key

1	Ball bearings
2	Sliding assemble
3	Return spring
4	Spherical seating of machine
5	Upper platen of machine
6	Spherical seating of the jig
7	Upper platen of the jig
8	Specimen
9	Lower platen of the jig
10	Jig
11	Lower platen of the machine

Figure 7 Typical jig for compressive strength testing

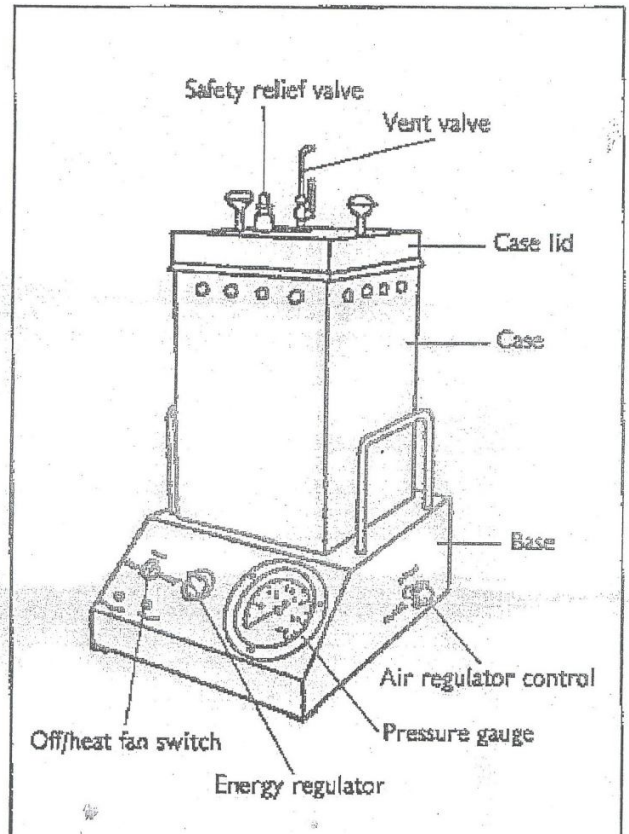

Figure 8 Diagram of parts

Mortar constituents

Sand :

General

CEN Standard sands , which are produced in various countries , was used to determine the strength of cement in a accordance with this standard . CEN standard sand , EN 196-1 conformed to the requirements . The conformity was tested by the national standardization organization within whose area of jurisdiction the CEN Standard sand , EN 196-1 was produced .

The national standardization organization ensured that the CEN standard sand , EN196-1 during its subsequent production is continuously monitored in accordance with this European Standard .

In view of the difficulties of specifying CEN Standard sand completely and unambiguously, it is necessary during certification and quality control testing to standardize the sand against the CEN Reference sand . CEN Reference sand , CEN 196-1 .

CEN Reference Sand:

The CEN Reference sand is a natural siliceous sand consisting preferably of rounded particles and has silica content of at least 98% . particle size distribution lie within the limits defined in table 7

Table (7) : particle size distribution of the CEN References and complying of the results

Square mesh size (mm)	Cumulative sieve residue(%)
2,00	0
1,60	7 – 5
1,00	33 – 5
0,50	67 – 5
0,16	87 – 5
0,08	99 - 1

The sieve analysis of the sand carried out with a represent sample . Sieving continued until the amount of sand passing through each sieve is less than 0.5 g\min .

The moisture content was less than 0,2% determined as the loss of mass of a representative sample of sand after 2 h drying at 105ºC to 110ºC and expressed as percentage by mass of the dried sample .

CEN Standard sand:

CEN Standard sand comply with the particle size distribution and moisture content specified and determined, During production these determination carried out at least once a day These requirement are insufficient to ensure that the Standard sand equivalence maintained by certification testing program comprising comparison of the standard sand with the Reference sand, This program and the associated calculation are described in11.6.CEN Standard sand may be delivered in separate fractions or premixed in plastics bags with a content of (1350 ± 5) g ; the type of material used for the bags have no effect on the results of the strength testing .

Cement :

When the cement to be tested is kept for more than 24 h between sampling and testing , it stored in completely filled and airtight containers made from a material which does not react with cement.

Water:

Distilled water used for reference testing for other tests , drinking water may be used.

Preparation of mortar:

Composition of the mortar:

The proportions by mass was one part of the cement, three parts of standard sand , and one half part of water (water \ cement ratio =0,50) .

Each batch for three test specimens shall consist of (450 +_ 5)g of cement, (1350 ± 5) g of sand and (225 ± 1) g of water.

Mixing of mortar:

The cement and water by means of the balance was weighed ,when water is added by volume it was dispensed with an accuracy of ± 1ml . Each batch of mortar mechanically using the mixer was mixed , the timing of various mixing stages refers to the time at which mixer power is switched on/off and maintained within3m. ±2 s.

The mixing procedure:

The water and the cement into the bowl was placed , taking care to avoid loss of water or cement ,

Immediately the water and cement brought into contact, At the low speed mixer started while starting the timing of mixing stages . In addition the time, was record to the nearest minute , as (zero time) . After 30 s of mixing , sand was added steadily during the next 30 s. the mixer switched to the high speed and the mixing continued for an additional 30 s .

the mixer Stopped for 90 s . During the 30 s , by means of a rubber or plastics scraper the mortar adhering to the wall and bottom part of the bowl was removed and placed in the middle of the bowl .

the mixing Continued at the high speed for 60 sec

Preparation of test specimens:

Size of test specimens:

The specimens moulded immediately after the preparation of the mortar with the mould and hopper firmly clamped to the jolting table, using a suitable scoop , in one or more increments , the first of two layers of mortar (each about 300 g) into each of the mould compartments , directly from the mixing bowl. The layer Spreaded uniformly using the large spreader (fig.3) ,held almost vertically with its shoulders in contact with the top of the hopper and drawn forwards and backwards once along each mould compartment . then the first mortar layer was compacted using 60 jolts of the jolting apparatus .then the second layer of mortar Introduced , ensuring that there is a surplus of mortar level with the small spreader and the layer was compacted with further 60 jolts .

The mould was lift gently from the jolting table and the hopper was removed , immediately the excess mortar striked off with the metal straightedge , held almost vertically but inclined in the direction of striking . the pulling moved slowly with a transverse sawing motion once in each direction . this striking off procedure was repeated with the straight edge held at a more acute angle to smooth the surface .

The mortar was wiped off left on the perimeter of the mould as a result of the striking - off .

The moulds labeled or marked for identification purposes .

Conditioning of test specimens:

Handling and storage before demoulding:

A plate of glass or other impermeable material was placed which does not react with cement of approximate size
210mm x 185mm x 6mm on the mould .
each covered mould was placed without delay . On a horizontal base in the moist air room or cabinet . the moist air have access to all side of the mould . Moulds not be stacked one upon the other .

Each mould was removed from storage at its appropriate time for demoulding .

Demoulding of specimens:

demoulding was carried out taking care not to damage specimens .
Plastics or rubber hammers, was used for demoulding. demoulding was carried out for 24 h tests not more than 20 min before the specimens are tested.

2/Methods

Selection of the suitable pressure and temperature of the autoclave:

A No. of cement specimens (about 35 samples) were tested in different ranges of pressures and temperatures of the autoclave(using a small apparatus) which its capacity was not more than 1.2 mpa (1200kpa)pressure and 150ºc, trying to reach a suitable reasonable precise results, unfortunately, undesirable results was obtained where the accepted variation of the results were more than 20%,for example when 1.2 mpa pressure and 150ºc temperature used following results were obtained;

Sample No	Accelerate curing-mpa	Conventional curing-mpa	Variation - %	Accepted variation - %
1	33.54	55.50	39.5%	±10%
2	43.60	55.50	21.4%	±10%
3	38.90	55.50	29.9%	±10%
4	35.43	46.88	24.4%	±10%
5	37.00	46.88	21.0%	±10%
6	34.44	46.88	26.5%	±10%
7	33.46	44.00	23.9%	±10%
8	29.70	44.00	32.5%	±10%
9	32.92	44.00	25.2%	±10%
10	39.00	48.65	19.8%	±10%
11	38.77	48.65	20.3%	±10%

Several trying was practically tested to get a precise and closed reading, till the suitable range of pressure and temperature of the autoclave was reached i.e. pressure of 295 ±10 (2mpa or 2000kpa)corresponds to a temperature of 216 ±2 ºC which was recommended to be perfect environmental conditions for applying this procedures for this study.

Autoclave operating instructions:

1.1 The upper insulated cover was removed.
1.2 the tightening into A1 of the autoclave cover was unscrewed using proper supplied key.

1.3The autoclave cover was removed by using the supplied tool.
1.4 1.5 L of water was poured Into the test chamber
1.5 Warning !Don't forget to pour water into the test chamber , otherwise the autoclave will be seriously damaged.Furthermore,it is important that the water quantity should not be less than the one prescribed in order that a correct saturated vapour atmosphere should be granted during the test cycle .
1.6 The specimens were placed into the supplied holder and put it into the test chamber ,had been sure that specimens were not in contact with water .
1.7 The autoclave cover had been mounted again by screwing the nuts I was be sure that the contact planes were perfectly cleaned .
1.8 The nuts had been tightened with dynamometric key by tightening groups of four nuts each and crosswise with following tightening torques :
Initial tightening torques : 50 Nm.
Final tightening torques : 100 Nm.
1.9 Then the thermometer was threaded into its sump .
1.10The upper cover had been mount insulated.
1.11 The vent valve was opened.
1.12 The right hand knobbed was surly in position “Fan “ and the “Heat selector “ knob index at zero.
1.13 the electric supply was Connected ;then the “power “ pilot lamp had been lighted on .
1.14 The standard pressure , temperature and relative humidity conditions had been provided inside the test chamber .
1.15 After that , the right hand knob was moved to “Heating “ .
1.16 The pointer of the “Heating selector“ knob Positioned to100% .
In the way, the fastest temperature increase is obtained . After the necessary time for boiling water is elapsed , vapour will come out from vent valve when this happens, the vent valve must be closed .
The vent valve has been maintained open to allow the outlet of air inside the test chamber in order to sure that internally there is a aqueous vapor ambient .
1.17 To the increase of temperature, a pressure increase (to be read on the gauge) has to correspond to2000 ± 50 kpa in 45-75 minutes was reached according to the standards .
When 1800 /1900kpa are reached the graduated knob index was rotated and position on 60% approx(in order to reach 2000kpa smoothly and to avoid to overcome such value) .
When the pressure reached 2000kpa , the temperature was 215 ºC approx . To maintain these internal conditions , the “ heat selector “ pointer was placed to a value between 25 ÷30%.
Once the “ Heat selector “ pointer is definitively positioned , the pressure was maintained during three hours as requested by the Standards .
Once the three test working hours at terminated , the “Heat selector “ knob indexed to zero was positioned and the position the right hand knob “Fan “ The related pilot lamp lighted on.

The slope of pressure decrease was such that 50kpa in on hour and half have been reached .
Once the atmospheric pressure is reached , water boiled again for some time due to the residual heat and the decrease of pressure .The internal condition was suitable to enter the test chamber was reached , the insulated upper cover and the autoclave cover removed by using the proper tool supplied .

Procedures:

1/At 24 h ±30 min after demoulding the specimens removed from the moist atmosphere and placed in autoclave at room temperature in rack so that all sides of the specimens was exposed to saturated steam . Ordinarily7 to 10 % of the volume of the autoclave was occupied by water .
2/To permit the air to escape from the autoclave during the early portion of the heating period , the vent valve left open until steam begin to escape .
3/The vent valve Closed and the temperature of the autoclave raised at a rate that brought the gage pressure of the steam to 2 mpa in 45 to 75 min from the time the heat is turned on .
4/The pressure 295 psi ±10 ± psi (2± 0.007 m pa)maintained for 3 h, a gage pressure of 295 ±10 corresponds to a temperature of 216 ±2 ºC .
5/At the end of 3 h period the autoclave is shutted off and then cooled at such a rate that the pressure was less than 10 psi at the end of 1½ h.
6/At the end of 1½ h period any remaining pressure was slowly released by partially opening the vent valve until the atmospheric pressure was attained .
7/Autoclave then opened, the test specimens placed in water at temperature above 90º C .
8/The water surrounding the specimens Cooled at a uniform rate by adding cold water so that the temperature of the water was lowered to 23ºC in 15 min .
9/A 23ºC water surrounding the specimens Maintained for an additional 15 min .
10/The prism halves is then tested using compressive machine , the prism halves centered laterally to the platens of the machine within ± o.5 mm , and started to load smoothly at the rate of 2400 ±200 n/s.

Calculation and Expression of test results:

Samples were exposed to the load using compression machine (2400 ± 200) N/S and the resulting readings are subjected to the following formula:
Rc =Fc/1600
Where:
Rc Is the compressive strength, in megapascals.
Fc Is the maximum load fracture, in Newtons.
1600 Is the area of the plates(40×40)mm.

Tests:

Samples were collected (more than 50 samples) for this study from different cement factories from different batches, samples then prepared well and moulded and the prism mortar is prepared according to: the methods of testing cement ISO guide EN 196-3 for compressive strength test.

Samples were moulded for 24 hrs and then demoulded to make the prisms(each 3 samples together), Then samples are exposed to the procedures of the test method mentioned above (the predicted method) using an autoclave apparatus, then cooled and tested in compressive strength machine then samples strength was expressed, the results obtained are monitored and recorded and registered ,(mentioned in the next chapter i.e. results & discussions) .

CHAPTER (3)

RESULTS & DISCUSION

1/READINGS AND RESULTS:

To express the precision of the obtained results ,the equation given in the proposal of my study was implemented (standard deviation equation), which can be explained by taking the conventional curing (mpa.) reading (conv.) And deduce it from the Accelerated curing (mpa) reading (Acc.) and divided it by the conventional curing (mpa) reading(Conv.) then multiplied by hundred to get the percentage of accepted variation as follows :

$$((conv - acc) \div con) \times 100$$

The readings are subjected to the above equation, the following results was formed, then the results studied, analyzed and then discussed.

READINGS:

Sample No	Accelerate curing-mpa	Conventional curing-mpa	Variation - %	Accepted variation - %
1	55.87	55.50	- 0.7%	±10%
2	52.60	55.50	5.2%	±10%
3	53.90	55.50	5.6%	±10%
4	52.43	55.50	5.3%	±10%
5	53.00	55.50	4.5%	±10%
6	52.44	55.50	5.5%	±10%
7	53.46	55.50	3.6%	±10%
8	52.70	55.50	5.0%	±10%
9	52.92	55.50	4.6%	±10%
10	53.00	48.00	4.5%	±10%
11	51.80	48.00	- 7.9%	±10%
12	47.28	48.00	1.5%	±10%
13	51.50	48.00	- 7.2%	±10%
14	50.44	48.00	- 5.1%	±10%
15	47.33	48.00	1.4%	±10%
16	40.87	44.00	7.1%	±10%
17	41.00	44.00	6.8%	±10%
18	45.81	44.00	- 4.1%	±10%
19	43.17	44.00	1.9%	±10%
20	41.78	44.00	5.0%	±10%
21	44.24	46.60	5.1%	±10%
22	43.30	46.60	7.1%	±10%
23	44.00	46.60	5.6%	±10%
24	45.00	46.60	3.4%	±10%
25	43.20	46.60	7.3%	±10%
26	49.87	48.00	- 3.9%	±10%
27	46.72	48.00	2.7%	±10%
28	48.50	48.00	- 1.0%	±10%
29	46.59	48.00	2.9%	±10%
30	48.44	48.00	- 0.9%	±10%
31	48.11	48.00	- 0.2%	±10%
32	52.70	55.00	5.0%	±10%
33	52.00	48.00	8.3%	±10%
34	42.00	44.00	4.5%	±10%
35	43.00	43.00	0.0%	±10%
36	48.00	52.00	7.7%	±10%
37	43.70	44.70	2.2%	±10%
38	42.50	45.30	6.2%	±10%
39	43.50	45.00	3.3%	±10%
40	42.50	45.30	5.5%	±10%

41	44.40	47.20	5.9%	±10%
42	43.60	46.80	6.8%	±10%
43	51.70	51.60	-0.2%	±10%
44	40.00	42.70	6.3%	±10%
45	34.30	47.00	7.9%	±10%
46	46.60	51.20	9.0%	±10%
Sample No	**Accelerate curing-mpa**	**Conventional curing-mpa**	**Variation - %**	**Accepted variation - %**
47	50.20	51.20	2.5%	±10%
48	50.00	48.00	- 4.2%	±10%
49	45.80	49.20	6.9%	±10%
50	41.30	44.40	7.0%	±10%
51	51.70	51.50	- 0.4%	±10%

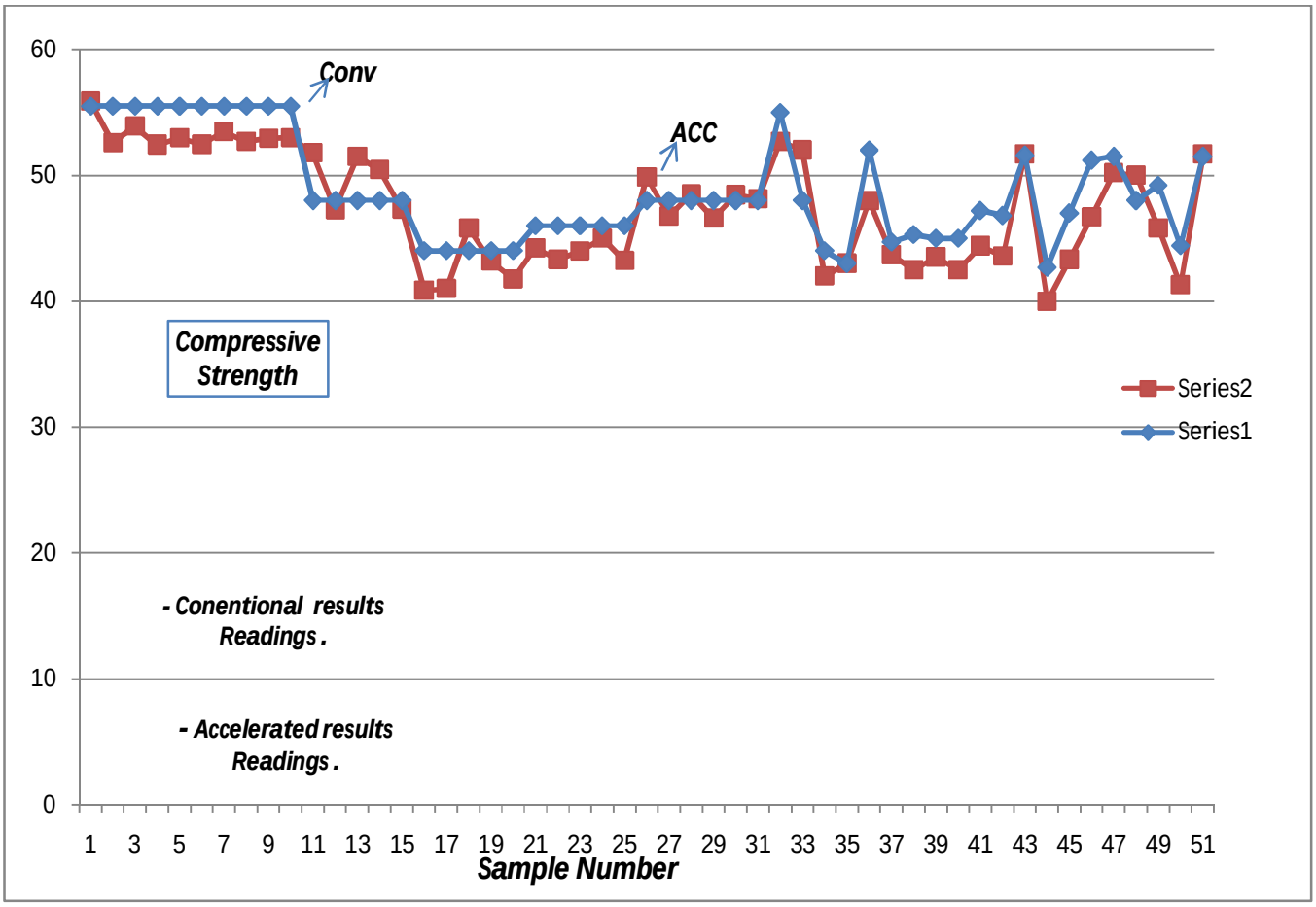
60
50
40
30
20
10
0
Conv
ACC
Compressive Strength
Series2
Series1
- Conentional results Readings .
- Accelerated results Readings .
1 3 5 7 9 11 13 15 17 19 21 23 25 27 29 31 33 35 37 39 41 43 45 47 49 51
Sample Number

2/DISCUSION:

This study is focusing on the determination of cement strength for the commonly used cement (Portland cement), concerning the cement compressive strength test to determine the cement quality and strength.

The normal daily work depends on making mortar sample prism or cube and test it by exposing it to high load using hydraulic machine to determine the cement (grade) and strength, by following many different method described in many different international standards.

Most of the standards specification state that, the cement mortar prism samples must be cured for 2,7, and 28 days to allow the running of all expected chemical reactions which is considerably long time to take a decision.

Actually during this time all expected chemical reactions between the cement sample component and added water and sand should takes place, and accordingly the maximum expected strength is reached, which means that the prism exposed to different environmental conditions (pressure and temperature) to allow all these chemical reactions to complete at the normal environmental conditions.

The aim of this study is to enhance and accelerate these chemical reactions by exposing the cement sample to the elevated environmental conditions (high pressure & high temperature) to reach the required expected strength without waiting all these long time.

A number of cement sample had been studied using rapid test(accelerated method) using an autoclave apparatus which is adjusted to particular high pressure & temperature and complete the test by following the stated procedures.

The cement mortar prism prepared according to(EN. 196-3), sample were kept in curing for 24 hrs in the mortar mould , then samples demoulded and exposed to specific elevated environmental conditions (high pressure & temperature) using an autoclave apparatus. The results is monitored, recorded, and registered

According to the obtained results, and when expressed using the main equation of the research and comparing the accelerated sample results values with conventional ones, it is founded that the results are located at the permitted range of the accepted variation limit i.e. (±10%).

If we look through the obtained results values we can see some variation in positive and negative regions, Negative values can be ascribed due to the in-completed chemical reactions for the conventional results.

When comparing the obtained results for the same sample for 28 days strength, the results was approximately similar and close to each other with consider to the percentages of acceptance.

By plotting a chart shown in fig. 8 for the readings of accelerated samples results and the readings of the conventional samples results against the strengths a nearly closed chart for each samples can be seen clearly, the characteristic features of the chart explain the closeness of both results to each other (accelerated & conventional), which illustrate and indicates the accuracy of the results of this study.

The assessment and evaluation of the obtained results may also depends on the proficiency and competency for the results evaluation. The final repercussion of this study can be concluded that, the chemical reactions takes place in cement samples during the curing period can be managed and controlled by adjusting the environmental conditions and accelerate the cement strength in a short time.

The conclusion of this study, that, the cement mortar strength can be predicted and estimated by accelerating the chemical reaction in cement samples in a significant little time without waiting for 28 days.

The recommendation , is to perform this new predicted procedure for more practicing in the cement plants, different similar laboratories for more investigations, then a recommendation to validate this method for recognition and approval.

CONCLOSION:

The mortar specimens are exposed to accelerated curing conditions that permit the specimens to develop a significant portion of their ultimate strength within short time period ranging from 30 to36 hrs.

The procedures involves simultaneous application of elevated temperature and pressure to the mortar using Autoclave apparatus.

The accelerated early strength obtained from this procedure in this test method can be used to evaluate mortar strength in the same way conventional 28-days strength have been used in daily work, with suitable change in the expected strength values. Since the practice of using strength values obtained from standard-cured prism at 28 days is long established and widespread, the results of accelerated strength tests are often used to estimate the later-age strength under standard curing. Such estimates should be limited to mortar using the same materials and mixture proportion as those used for establishing correlation.

References:

1-Astrom, K., Hagglund, T., Advanced PID Control Research Triangle park: Instrumentation, System and Automatic Society, 2006 .

2-Banyasz, C. Keviczky, L,. Vajek, 1. A noval adaptive control of cement raw material blending, Automatica, VoI. 23, 2003, pp. 87 – 96.

3-Bavdaz, G ., Kocijan J.,Fuzzy controller for cement raw material blending, Transactions of the Institute of Measurement and Control, VOI 29,2007, pp. 17-34.

4-Johansen, V.C Hills, L.M., Miller, F.M., Stevenson, R.W., The importance of cement raw mix homogeneity , Cement Americas, 2003.

5- Keviczky, L., Hette,ssy, J,. Higler ,M and Kolostori, J,. self-tuning adaptive control of cement raw material blending, Automatica, VoI. 14, 1978, pp. 525 – 532.

6- Kural, A., Ozsoy, C., Identification and Control of the raw material blending processing cement industry, International Journal of Adaptive Control and signal processing , VoI18,2004 pp. 472-442.

7-Lee, F.M., The chemistry of cement and concrete, 3d chemical publishing company, Inc., New York, 1971, pp. 164-165, 171-174.

8-Mindess and young, Book,1988 Eddition.

9-Ozsoy , C. Kural, A. Baykara, C. Modeling of the raw mixing process in Cement industry , proceedings of 8th IEEE International Conference on Emerging Technologies and Factory Automation, 2001,VoI.475-482.

10-(PCA, 1988).Portland Cement Association.

11-Reding, J.T., P.E. Muehlberg, and B.P. Shepherd(Dow chemical).industrial process profiles for environmental use: chapter 21.the cement industry, February 1997.

12-Tasmatsoulis, D., Development and Application of a cement Raw Meal Controller, Ind. Eng. Chem. Res., Vol. 44, 2005, pp. 7164-7174.

13-Tasmatsoulis, D., Effective Optimization of the Control System for cement Raw Meal Mixing Process: PID Tuning Based on Loop Shaping and Process Simulators, accepted for publication in WSEAS Transactions on System and Control.

14-Tsamattsoulis, D., Modeling of the raw mixing process in Raw Meal grinding Installations, WSEAS Transactions on system and Control, VoI.5, 2010, pp. 779-791.
15-Understanding Cement Book (e – Book) by : Nicholas B Winter.
26-Vitruvius, “The ten book of Architecture,” Dover publications,1960.
17- http://www.buildeazy.com/newplan/eazylist/cement.html.
18-http://www.understanding-cement.com/history.html.
19-http://www.ssig.gov.my/wp-content/.../Cement-Industry-in-Sudan-031011.pdf.
20-AASHTO M 85 and ASTM C 150, standard specification for cement.
21- EU 196-1, Methods of testing cement.