1.1 Introduction

There are several types of energy used in our lives such as solar energy, potential in the oil, coal, electricity and other energy and power. Given the importance of energy in the life of the individual and the UN it has drawn the attention of scientists and researchers in various scientific fields and to facilitate the study classified by scientists as the source into two parts: Firstly, non-renewable energy is fossil fuels such as coal, oil and natural gas, the main source of energy used by man and this type of fuel to be from the decomposition of living organisms buried in the ground millions of years ago.

The energy of this stock continues to drop; scientists are expected to implement these sources during the next several decades.
Secondly, renewable energy sources, renewable sources of energy that are replaced easily and quickly so that a source of energy to perform his sources made up.

The majority of renewable energy sources known today sourced from the sun directly, or indirectly. Solar energy is used for heating, lighting homes and generates electricity. Also from renewable energy, wind power, thermal energy in the ground, and water energy.

Energy is an important element in the Sudan for humans because it represents an element inherent in his everyday life, needed by the human in various fields of industry, agriculture, health, education, and human comfort.

Sudan supports the production of electric energy generating hydro and thermal generation, characterized by watery generation that cheap energy but disadvantage cannot be used in some months of the year، and output depending on the water stock, so it was necessary to thermal generation, as it is characterized by thermal generation the possibility of using it at any time, but disadvantage by its dependence on fossil fuels.

The production of energy generated from thermal generation through a combination of thermal stations big stations KOSTEE, which has a capacity of production MW 500 BAHRRI station with a capacity of production MW 330 and GARRI 1,2 which has a capacity of production MW 420 and GARRI4 and started with a capacity of production MW110. Each of these stations linked to the central control network so as to be distributed.

1.2 Background of Study

Gas turbine is heat engine which uses fuel energy to produce mechanical output power, either as torque through a rotating shaft or as jet power in the form of velocity through an exhaust nozzle.

A gas turbine, also called a combustion turbine, is a rotary engine that extracts energy from a flow of hot gas produced by combustion of gas or fuel oil in a stream of compressed air.

It has an upstream air compressor with radial or axial flow mechanically coupled to a downstream turbine and a combustion chamber in between. Gas turbine may also refer to just the turbine element.

Energy is released when compressed air is mixed with fuel and ignited in the combustor.

The resulting gases are directed over the turbine blades, spinning the turbine, and mechanically powering the compressor. Finally, the gases are passed through a nozzle, generating additional thrust when accelerating the hot exhaust gases by expansion back to atmospheric pressure.

Energy is extracted in the form of shaft power, compressed air and thrust, in any combination, and used to power aircraft, trains, ships, electrical generators, and even tanks.

Gas turbines are always used if high power density, low weight and quick starting are required. As the moving parts of a gas turbine only perform rotary motion, almost vibration free running can be achieved if turbine is well balanced.

1.3 Problem Statement

Low efficiency of cooling oil Lubrication in gas turbine.

That reason affects for

- Stability product of machine.
    - It is decrease the load product.
    - Some time shut down of machine

1.4 Objective of Research Work

- Improving oil cooling.
- Increase production efficiency.

1.5 Methodology

- Study for the old lube oil system.
- Determination the problem effected.
- Change the open cooling system “Raw Water” by closed system “Demine Water”.
- Add Plat Heat Exchanger.
- Add auxiliary for the Plat Heat Exchanger.

2.1 Introduction

The gas turbine obtains its power by utilizing the energy of burnt gases and air, which is at high temperature and pressure by expanding through the several ring of fixed and moving blades.

It thus resembles a steam turbine. To get a high pressure (of the order of 4 to 10 bar) of working fluid, which is essential for expansion a compressor, is required. The quantity of the working fluid and speed required are more, so, generally, a centrifugal or an axial compressor is employed.

The turbine drives the compressor and so it is coupled to the turbine shaft.

If after compression the working fluid were to be expanded in a turbine, then assuming that there were no losses in either component the power developed by the turbine would be just equal to that absorbed by the compressor and the work done would be zero. But increasing the volume of the working fluid at constant pressure, or alternatively increasing the pressure at constant volume can increase the power developed by the turbine. Adding heat so that the temperature of the working fluid is increased after the compression may do either of these.

To get a higher temperature of the working fluid a combustion chamber is required where combustion of air and fuel takes place giving temperature rise to the working fluid.

Thus, a simple gas turbine cycle consists of

(1) A compressor,

(2) A combustion chamber and

(3) A turbine.

Since the compressor is coupled with the turbine shaft, it absorbs some of the power produced by the turbine and hence lowers the efficiency. The network is therefore the difference between the turbine work and work required by the compressor to drive it.

Gas turbines have been constructed to work on the following: oil, natural gas, coal gas, producer gas, blast furnace and pulverized coal.

2.2 Classification of Gas Turbine Power Plant

The gas turbine power plants which are used in electric power industry are classified into two groups as per the cycle of operation.

(*a*) Open cycle gas turbine.

(*b*) Closed cycle gas turbine.

2.2.1Open Cycle Gas Turbine Power Plant

A simple open cycle gas turbine consists of a compressor, combustion chamber and a turbine as shown in Fig 2.1.

The compressor takes in ambient air and raises its pressure. Heat is added to the air in combustion chamber by burning the fuel and raises its temperature.

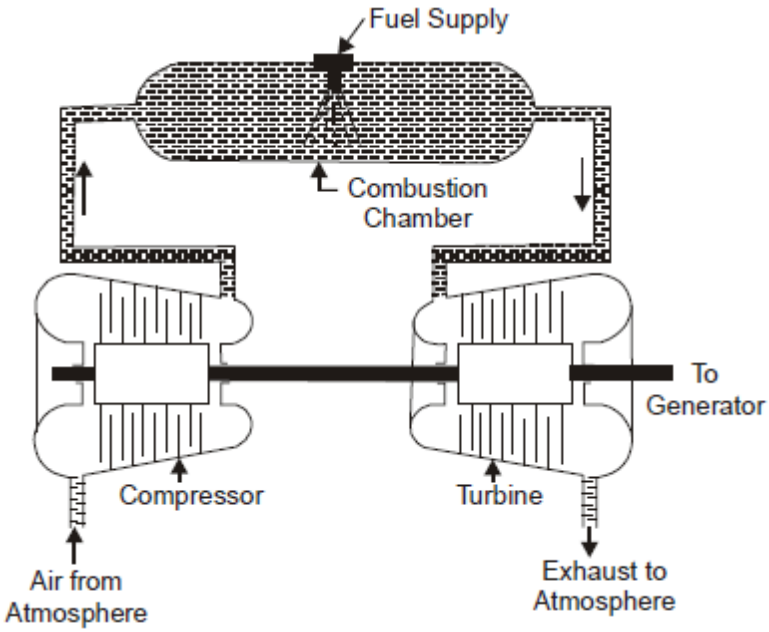

Fig 2.1 Open cycle gas turbine.

The heated gases coming out of combustion chamber are then passed to the turbine where it expands doing mechanical work.

Part of the power developed by the turbine is utilized in driving the compressor and other accessories and remaining is used for power generation.

Since ambient air enters into the compressor and gases coming out of turbine are exhausted into the atmosphere, the working medium must be replaced continuously.

This type of cycle is known as open cycle gas turbine plant and is mainly used in majority of gas turbine power plants.

2.2.2 Closed Cycle Gas Turbine Power Plant

In closed cycle gas turbine plant, the working fluid (air or any other suitable gas) coming out from compressor is heated in a heater by an external source at constant pressure.

The high temperature and high-pressure air coming out from the external heater is passed through the gas turbine.

The fluid coming out from the turbine is cooled to its original temperature in the cooler using external cooling source before passing to the compressor.

The working fluid is continuously used in the system without its change of phase and the required heat is given to the working fluid in the heat exchanger.

The arrangement of the components of the closed cycle gas turbine plant is shown in Fig 2.2.

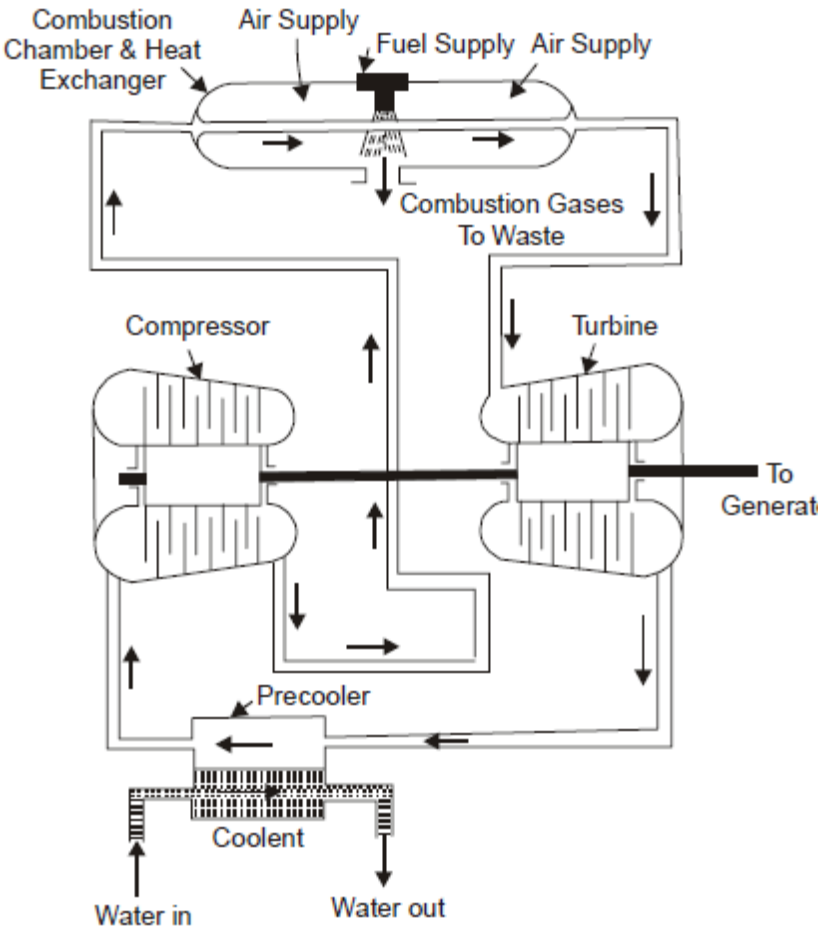

Fig 2.2 Closed Cycle Gas Turbine Plant

2.3 Elements of Gas Turbine Power Plant

It is always necessary for the engineers and designers to know about the construction and operation of the components of gas turbine plants. [1]

2.3.1 Compressors

Compressors are either the axial design (with up to 19 stages) or the centrifugal design (with one or two impellers). In the axial compressor designs, beam and cantilever style stator vanes are utilized. Cantilever style stator vanes are used in compressors where stage loading is relatively light. Compressor pressure ratios have increased significantly over the past forty years with the aero-derivative consistently leading the way to higher levels. Pressure ratios, which were 5:1 at the start of World War II, have increased to 12:1 for the newer industrial gas turbines.

Through the use of increased stage loading (variable geometry and dual-spool techniques), compressor pressure ratios of most recent aero-derivatives have been increased to greater than 30:1.

This advancement in the state of the art is a prime contributor in the overall increase in simple-cycle thermal efficiency to 35% for aero-derivative gas turbines. To achieve similar efficiencies the industrial gas turbines have had to use regenerators and other forms of waste heat recovery. [2]

Fig 2.3 Compressors of Gas Turbine

2.3.2Combustion Chambers

The combustor accepts from the compressor and delivers it at an elevated temperature to the turbine.

Thus the combustor is a direct fired air heater in which fuel is burned almost stoichiometric ally with one-third or less of the compressor discharge air.

Combustion products are then mixed with the remaining air to arrive at a suitable turbine inlet temperature. [3]

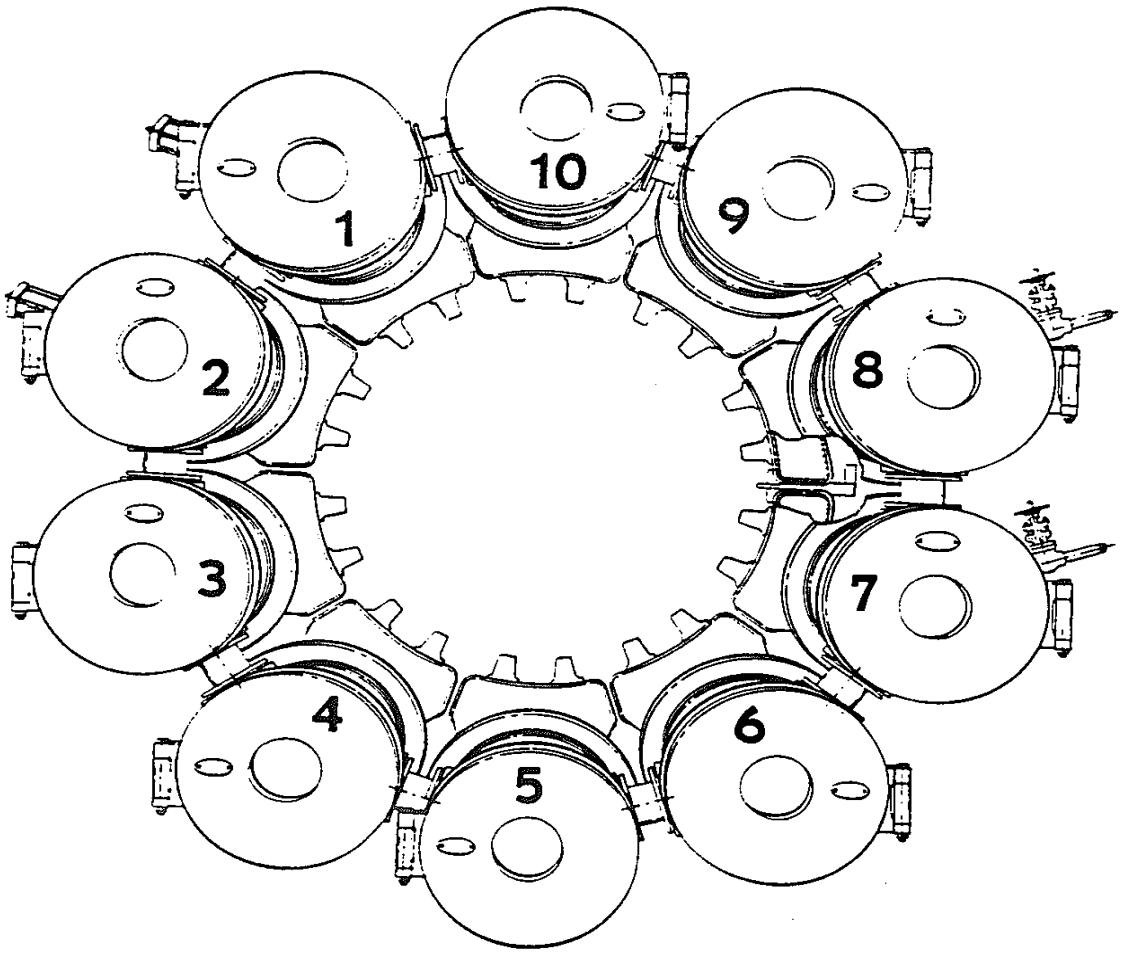

Fig 2.4 Combustion Chambers of Gas Turbine

2.3. 3 Gas Turbines

The common types of turbines, which are in use, are axial flow type. The basic requirements of the turbines are lightweight, high efficiency; reliability in operation and long working life.

Large work output can be obtained per stage with high blade speeds when the blades are designed to sustain higher stresses.

More stages of the turbine are always preferred in gas turbine power plant because it helps to reduce the stresses in the blades and increases the overall life of the turbine.

More stages are further preferred with stationary power plants because weight is not the major consideration in the design which is essential in aircraft turbine-plant.

The cooling of the gas turbine blades is essential for long life as it is continuously subjected to high temperature gases. There are different methods of cooling the blades. The common method used is the air-cooling.

The air is passed through the holes provided through the blade.

Fig 2.5 Turbine Part of Gas Turbine.

2.4 Lubrication System

2.4.1 Elements of Lubrication System

The following are the elements of lubrication system of a gas turbine

1. Oil tank,
2. Oil pump,
3. Filter and strainer,
4. Relief valve,
5. Oil cooler,
6. Oil and pipe line,
7. Magnetic drain plug,
8. By-pass, valve, and
9. Warning devices.

2.4.2 Gas Turbine Efficiency

Gas turbines may operate either on a closed or on an open cycle. The majority of gas turbines currently in use operate on the open cycle in which the working fluid, after completing the cycle is exhausted to the atmosphere.

The air fuel ratio used in these gas turbines is approximately 60:1. The ideal cycle for gas turbine is Brayton Cycle or Joule Cycle. This cycle is of the closed type using a perfect gas with constant specific heats as a working fluid.

This cycle is a constant pressure cycle and is shown in Fig 2.6. On P-V diagram and in Fig 2.7 on T-s diagram. This cycle consists of the following processes:

The cold air at 3 is fed to the inlet of the compressor where it is compressed along 3-4 and then fed to the combustion chamber where it is heated at constant pressure along 4-1. The hot air enters the turbine at 1 and expands adiabatically along 1-2 and is then cooled at constant pressure along 2-3.

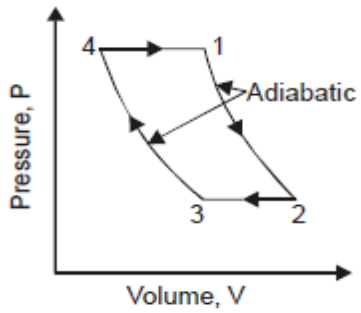

Fig 2.6 Brayton Cycle P-V Diagram

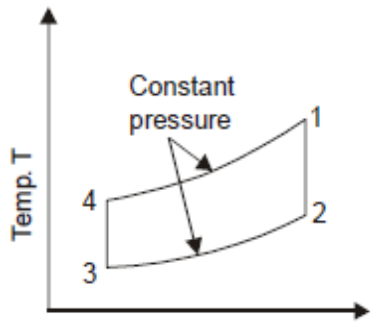

Fig 2.7 Brayton Cycle T-S Diagram

Heat supplied to the system = $k_p(T_1 - T_4)$ (2.1)

Heat rejected from the system = $k_p(T_2 - T_3)$ (2.2)

Where k_p= Specific heat at constant pressure,

Work done = Heat supplied – Heat rejected

Work done = $k_p(T_1 - T_4) - k_p(T_2 - T_3)$ (2.3)

Thermal efficiency (μ) of Brayton Cycle

$$\mu = \frac{\text{Work done}}{\text{Heat Supplied}} = \frac{k_p(T_1 - T_4) - k_p(T_2 - T_3)}{k_p(T_1 - T_4)} \quad (2.4)$$

$$\mu = 1 - \frac{T_2 - T_3}{T_1 - T_4} \quad (2.5)$$

For expansion 1-2

$$\frac{T_1}{T_2} = \left(\frac{P_1}{P_2}\right)^{\frac{K-1}{K}} \quad (2.6)$$

$$T_1 = T_2 \left(\frac{P_1}{P_2}\right)^{\frac{K-1}{K}} \quad (2.7)$$

For compression 3-4

$$\frac{T_4}{T_3} = \left(\frac{P_4}{P_3}\right)^{\frac{k-1}{k}} = \left(\frac{P_1}{P_2}\right)^{\frac{k-1}{k}} \quad (2.8)$$

$$T_4 = T_3 \left(\frac{P_4}{P_3}\right)^{\frac{k-1}{k}} \qquad (2.9)$$

Substituting the values of T1 and T4 in equation (2.5), we get

$$\mu = 1 - \frac{T_2 - T_3}{T_2\left(\frac{P_1}{P_2}\right)^{\frac{K-1}{K}} - T_3\left(\frac{P_4}{P_3}\right)^{\frac{k-1}{k}}} \qquad (2.10)$$

$$\mu = 1 - \frac{T_2 - T_3}{(T_2 - T_3)\left(\frac{P_1}{P_2}\right)^{\frac{K-1}{K}}\left(\frac{P_4}{P_3}\right)^{\frac{k-1}{k}}} \qquad (2.11)$$

2.4.3 Lubricating Requirements

The lubricating requirements for the gas turbine power plant are furnished by a common forced feed lubrication system.

This lubrication system, completed with tank, pumps, coolers. Filter, valves and various control and protection devices, furnishes normal lubrication and absorption of heat rejection load of the gas turbine.

Lubricating fluid is circulated to the two main turbine bearings, generator bearings, ‘Lubrication gear, and to the turbine accessory gear, a portion of the pressurized fluid is diverted and filtered again for use by hydraulic control devices as control fluid and as a supply to other systems.

The lubrication system is designed to provide an ample supply of filtered lubricant at the proper temperature and pressure for operation of the turbine and its associated equipment.

The lubrication system including all major components is shown in the system schematic diagram in the reference Drawings Section. Major system components include:

a. Lube reservoir in the turbine base.

Ь. Main lube pump (shaft driven from the accessory gear).

c. Auxiliary lube pump.

d. Emergency lube pump.

e. Pressure relief valve VR1 in the main pump discharge.

f. Lube fluid heat exchangers.

g. Main lube filters.

h. Bearing header pressure regulator VPR2.

Lubricating fluid for the main oil pump, the auxiliary and the emergency pumps is supplied from the reservoir while lubricating fluid used for control is supplied from the bearing header.

This lubricant must be regulated to the proper, predetermined pressure to meet the requirements of the main bearings and the accessory lube system, as well as the hydraulic control and trip circuits.

Regulating devices are shown on the Lube System Schematic diagram.

All lubricating fluid is filtered and cooled before being piped to the bearing header.

The system is a closed loop, forced feed system including a lube oil supply reservoir. The reservoir for the lubrication system is the 1700-gallon tank which is fabricated as an integral part of the turbine base.

Lubricating fluid is pumped from the reservoir by the main shaft driven pump (part of the accessory gear) or auxiliary or emergency pumps to the bearing header, the accessory gear and the hydraulic supply system.

The lube pumps take their suction from the oil tank and discharge into a common header.

All lubricant pumped from the lube reservoir to the bearing header flows through the lube fluid heat exchanger to remove excess heat and then through the cartridge type filter providing five-micron filtration.

After lubricating the bearings the lubricant flows back through various drain lines to the lube reservoir.

2.4.4 Lube Oil Tank and Piping

The lube oil tank in the accessory end of the turbine base also supports and contains several lubrication system components. Mounted on or supported from the tank top are the ac and dc motor driven lube pumps, and various control and protective devices. Extending into the tank from the side of the lube reservoir are the lube fluid heat exchangers and filters. Access to the tank interior is through an opening in the top. An oil tank fill connection is provided in the side of the tank as are two oil drains near the tank bottom. The tank also has connections for a centrifuge.

Lube piping consists mainly of welded fabrications of seamless steel pipe with gaskets used to prevent leakage at bolted flanges. Whenever possible, the lube oil feed piping is contained within the oil tank or drain headers. A vent to atmosphere is installed at a flanged opening in a junction box in the external oil drain. All drain points are shown on the purchaser’s

Connection Outline and the notes contained in the Reference Drawing section of this manual. Visual oil flow checks can be made using the flow sights provided in the drains.
This flow should be checked when the lube oil pumps are started prior to every turbine startup.

A lube level gauge and a1arгп device is part of the tank level indicator which is operated by a float-arm. The device is mounted to the side of the lube oil tank above the maximum expected level of the lube supply. The float mechanism operates a dial gauge and two device switches, 71QH-1 and 71QL-1. The switches are connected into the alarm circuit of the turbine control panel to initiate an alarm display message on the turbine panel scope and sound an audible alarm if the liquid level rises above, or falls below, the level shown on the Schematic Piping Diagram, The oil level gauge will indicate "F" (full) ores" (empty) before the alarm is given. There is also a sight glass mounted or, the oil tank which provides for visual monitoring of the oil level، Refer in appendix (A).

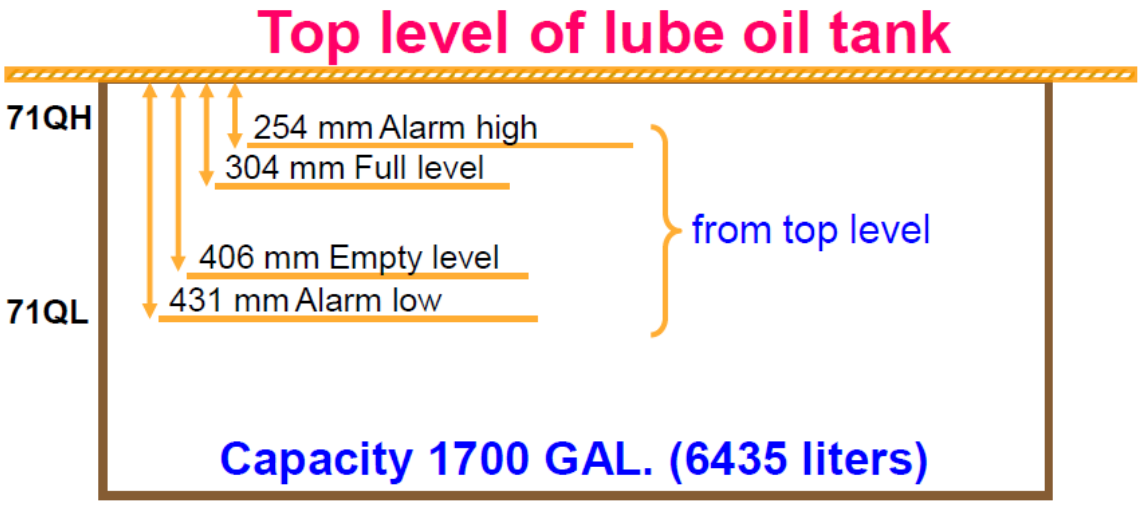

Fig 2.8 Lube oil tank level

2.4.5 Stand by Heater

During standby periods, the lubricating fluid is maintained at a viscosity proper for turbine startup and operation by two immersion heaters, 23QT-1 and 23QT-2 installed in the lube reservoir. Temperature switch 26QL-1 and 26QN-1 sense reservoir fluid temperature, and control the heaters to maintain fluid temperature achieve allowable viscosity. Also switch 26QN-1 will not permit the turbine to be started if the fluid temperature drops blew that required for startup، Refer in appendix (B) figure 1.

2.4.6 Main lube pump

The main lube pump is built into the inboard wall of the lower half casing of the accessory gear. It is driven by a splinted quill shaft from the lower drive gear. The output pressure to the lubrication system is limited by back-pressure valve VR1 to maintain system pressure.

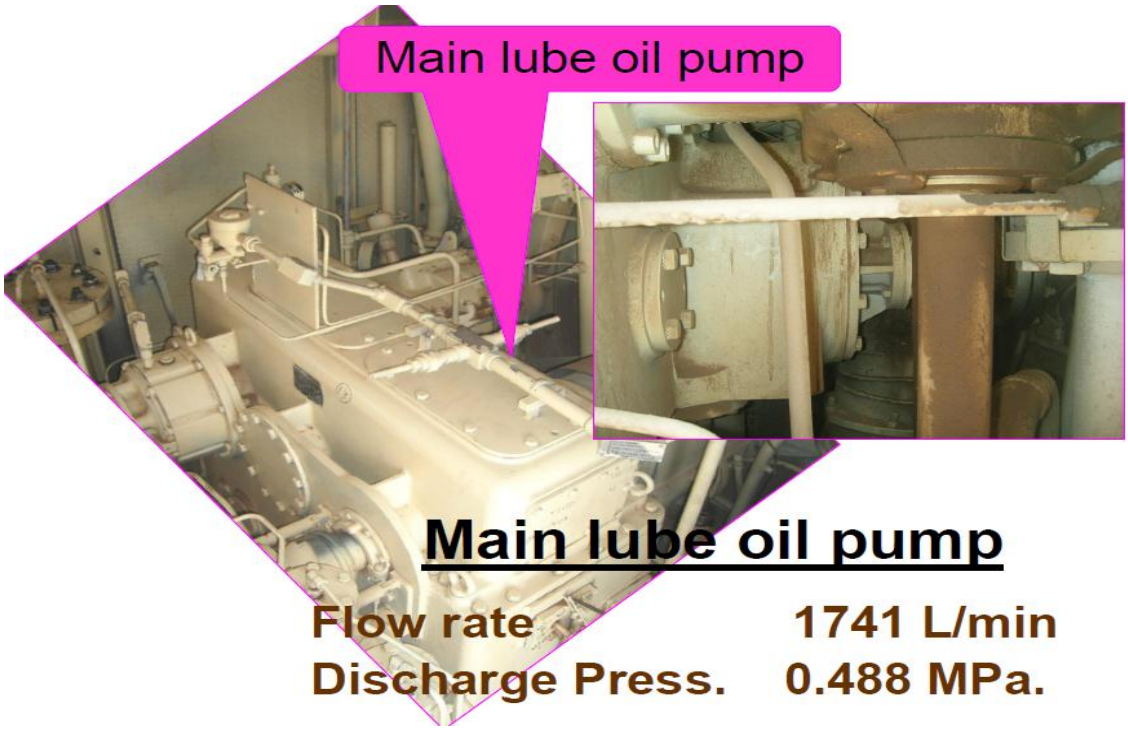

Fig 2.9 main lube oil pump

2.4.7 Auxiliary and emergency lube supply pump

The auxiliary and the emergency lube supply pumps are both, Submerged, centrifugal-type pumps that provide lubricant t pressure during startup and shutdown of the gas turbine.

Fig 2.10emergency lube oil pump **Fig 2.11**Auxiliary pump

2.4.8 Heat Exchangers (LUBE Oil Cooler)

Extended tank-type heat exchangers coolers, with exposed fixed-tube sheet and bundle construction (straight-tube), are used to dissipate heat absorbed by the 1ubricating oil. Two (dual) heat exchangers are used and are installed horizontally through the side of the lube oil tank. Water is supplied to the heat exchangers for cooling.

Dual heat exchanger, arranged horizontally side by side, are installed in the tank and connected into the pump discharge header through a manual transfer valve. Refer in appendix (B) figure 2.

2.4.9 Main Oil Filter

Filtration of all lube oil is accomplished by a 5 micron, pleated paper filter cartridges installed in the lube system just after the lube oil heat exchanger. A dual filter arrangement is used with a transfer valve installed between the filters to direct oil low through either filter and into the lube oil header.

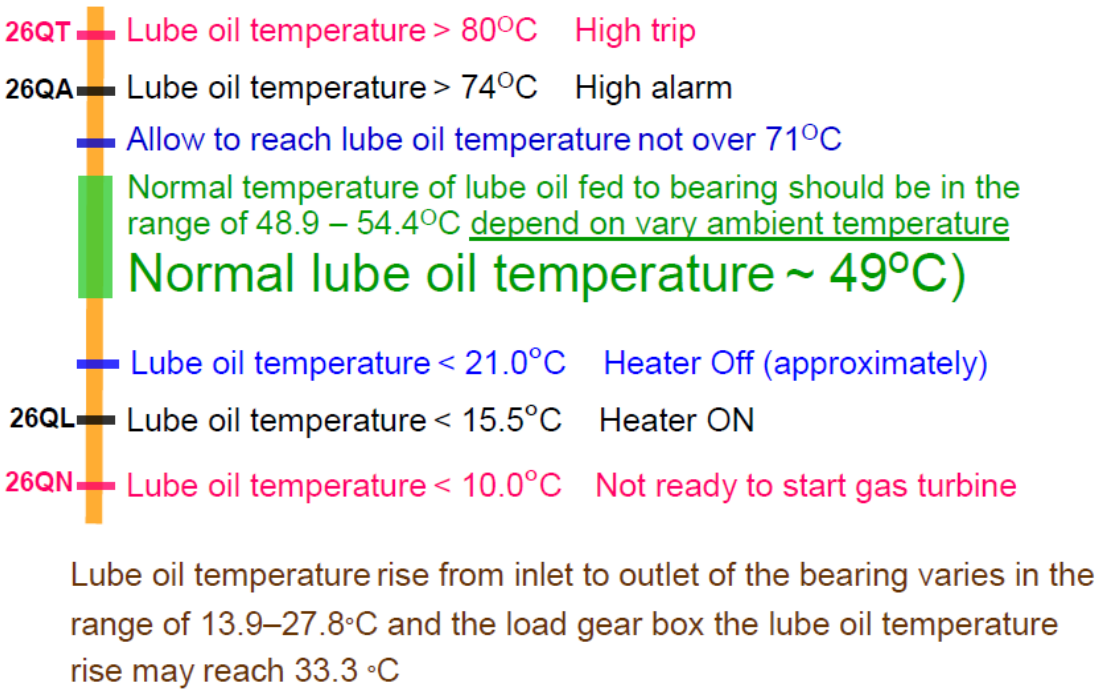

Lube oil temperature rise from inlet to outlet of the bearing varies in the range of 13.9–27.8◦C and the load gear box the lube oil temperature rise may reach 33.3 ◦C

Fig 2.12 Lube oil temperature

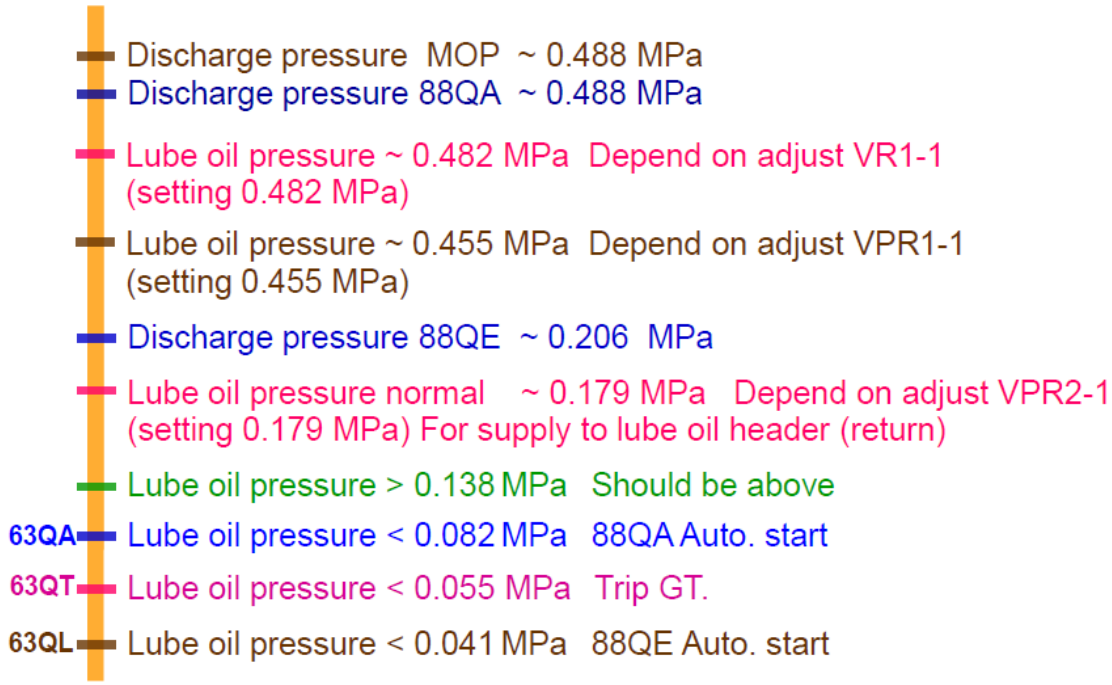

Fig 2.13 lubes oil pressure

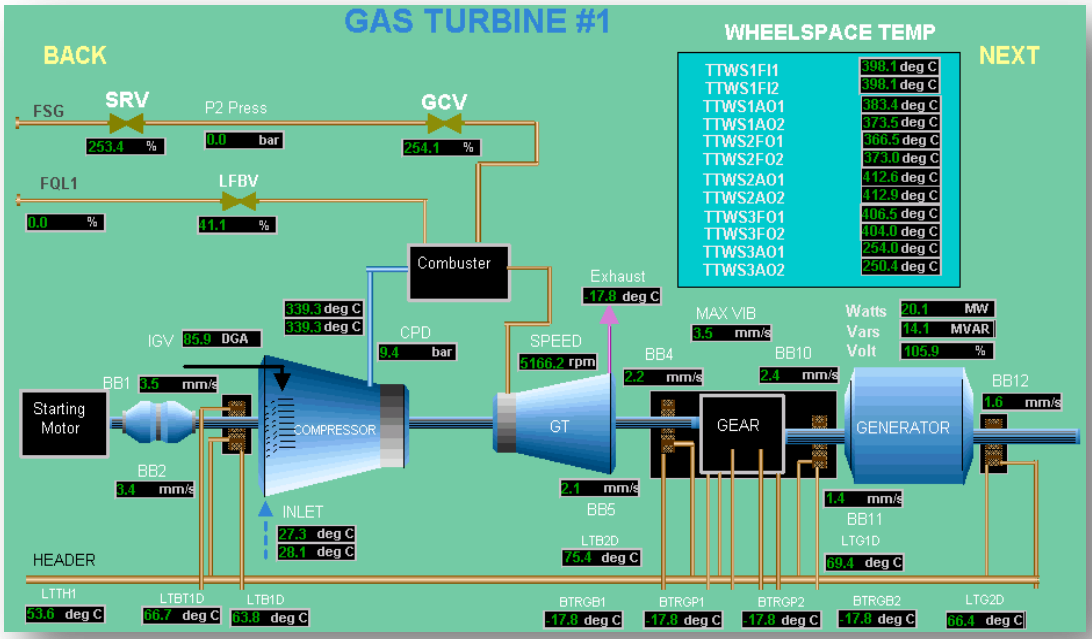

Fig 2.14 control GT1 Operation

In the report of "Hydroelectric Research and Technical Services Group" (2004) they mentioned that the basic purpose of a lubricant is to reduce friction and wear between two surfaces moving relative to one another, In most cases, a lubricant also dissipates heat, prevents rust or corrosion, acts as a seal to outside contaminants, and flushes contaminants away from bearing surfaces.

For the lubricant to accomplish these functions, a fluid lubricant film must be maintained between the moving surfaces. The proper selection and use of lubricants, as well as the care and operation of lubricating systems, is an essential part of any power plant maintenance program. Any piece of equipment with moving parts depends on some type of lubricant to reduce friction and wear and to extend its life.

To choose an appropriate lubricant for a particular application and to maintain the lubricant's effectiveness, a basic understanding of lubrication theory and the characteristics of lubricants can be very beneficial. [4]

In the report of "Effect of Lube Oil Temperature on Turbine Shaft Vibration" (2013) most rotating machine defects can be detected by such a system much before a dangerous situation occurs.

It allows the efficient use of stationary online continuous monitoring system for condition monitoring and diagnostics as well. Now a day's real time monitoring reduces breakdowns to a large extent.

We can conduct it with help of sensors and analyzers with software. T.S.I includes various velocity transducers, accelerometers and LVDT's with suitable automation and software for proper human interaction.

By the help of real time monitoring we can assure continuous power supply without any catastrophic failure.

The object of this paper is to identify influence of lube oil temperature on turbine shaft vibration at turbo generator at unit-6 (195 MW), Kota super thermal power station by measuring vibration amplitude and analyzing problem with help of Matlab.

• In most of the cases, Turbine shaft displacements are maximum when lube oil temperature is higher than its designated safe value.

• Displacement of HPT front shaft at Direction (Ay) is maximum and it is also higher than its designated safe value.

• Corresponding value of lube oil temperature of Ay is also higher than its designated safe value.

So finally we can make conclusion that displacement of turbine shaft increases when lube oil temperature is higher than its designated safe value.[5]

In the report of "Turbine Lube Oil System Monitoring and Control using PIC Controller" (2015) the HP and LP Turbine Rotor of 60MW unit placed in the journal bearings which are being lubricated to avoid friction. The rotor shaft and bearings should not have direct contact with each other. By making an oil film layer in between shaft and bearing the direct contact is avoided. The lube oil header pressure should be maintained at 1.2kg/cm2 so that the oil film can be created. The separate lube oil system provides continuous lubrication to the bearings.

Main oil tank level, header pressure monitoring, lube oil coolers and redundancy scheme for lube oil pumps are the associate systems for monitoring and control for lube oil system. The existing system for monitoring and control are relay logic and each function is working separately. In our project work we integrate the level monitoring of MOT, Pressure monitoring Lube oil coolers, redundancy scheme for lube oil pumps in to single system using PIC Microcontroller. In our project work we integrated all the sub-system into a single system and made it an overall supervisory control & monitoring using PIC microcontroller. For that oil level, temperature, pressure of lube oil system is made feedback to ADC of microcontroller mainly for parameter display. Using these feedbacks the pump change over scheme, oil temperature control using cooler and tank level control is achieved.

In the existing Turbine lube oil system these systems are not interred connected and each have separate control module & monitoring. This system has no overall supervisory control.

The main disadvantage of this system is separate man power requirement for each sub system and there may be chances of human error. The lube oil pump change over scheme is based on relay logics (hardware) and it required periodical maintenance.

This system is purely a manual process and it is time consume work. Thus our project overcomes these disadvantages. [6]

In the report of "Remedial Action Step of Sub Synchronous Vibration Trip on Steam Turbine" (2009) when Steam Turbine was not damaged at all, it kept on suddenly shutting down by trip vibration magnitude. It became the most serious issues on the top of the executive table. Immediate action was needed because we had to start up the unit as soon as possible. We initially had to choose the method from the shortest time taken and then the most efficient action. Due to the fact that Sub synchronous could be self-excited vibration which was always associated with the stimulated natural frequency of the rotor system, it could be the result of every single source of rotating behavior.

This paper presents the Sub synchronous trip event and remedial action step of 115 MW Steam Turbine at South Bangkok Combined Cycle Power Plant which was first synchronized in 1995 and had found the problem since March 15th, 2008. We trust that this Action Step can be applied for Sub synchronous vibration problem of all power plants. [7]

In the report of "Vibration, Lubrication and Machinery Consideration for a Mixer Gearbox Related to Iran Oil Industries" (2014) some common gearboxes vibration analysis methods and condition monitoring systems are explained. In addition, an experimental gearbox vibration analysis is discussed through a critical case history for a mixer gearbox related to Iran oil industry.

The case history also consists of gear manufacturing (machining) recommendations, lubrication condition of gearbox and machinery maintenance activities that caused reduction in noise and vibration of the gearbox. Besides some of the recent patents and innovations in gearboxes, lubrication and vibration monitoring systems explained. Finally micro pitting and surface fatigue in pinion and bevel of mentioned horizontal to vertical gearbox discussed in details. [8]

In the report of "Vibration Analysis of Turbo Generator in Kota Super Thermal Power Station" (2013) super Thermal Power Stations (STPS) or Super Power Station are a series of ambitious power projects planned by the Government of India. With India being a country of chronic power deficits, the Government of India has planned to provide 'power for

all' by the end of the plan, The capacity of thermal power is 1000 MW and above.

This paper presents an analysis of steam turbine vibration monitoring system of Kota super thermal power plant. In this paper, a detailed concept and techniques used in turbine vibration monitoring, monitoring equipments and vibration analysis of turbo generator of 195 MW, UNIT-7 has been discussed to evaluate performance of turbine.

A detailed report on vibrations of bearings corresponding to the bearing temperatures of turbo generator has been done by using IRD 880 instruments. [9]

In the report of "Failure analysis of a shell and tube oil cooler" (2011) Failure analysis was carried out on aluminum gaskets in both sides of a shell and tube oil cooler and the causes of oil–water and hot water–cooling water mixing were investigated.

The cooling water (as it enters into the oil cooler) and hot water (as it leaves the oil cooler) were chemically analyzed.

Galvanic corrosion was evaluated using the immersion corrosion test under weightlessness and Table potentio dynamic polarization curves, and both results were compared.

The morphology and corrosion products components of corroded aluminum gaskets were studied using SEM and EDS, respectively.

The results indicated that the aluminum gaskets were corroded as a result of chemically induced corrosion leading to hot water–cooling water mixing in both sides of the oil cooler, while the failure of the rear end aluminum gasket led to oil–water mixing in the rear side of the oil cooler. Also, it was demonstrated that leakage from tubes–tube sheets joints in both sides due to chemically induced corrosion has taken place.

Finally, the relationship between corrosion occurrence and the oil cooler failure was discussed.

It is recommended that aluminum gasket and copper tubes not be used with the carbon steel tube sheet in such heat exchangers. [10]

3.1 Heat Exchangers problem

Water flow in the tubes of Shell & Tube heat exchanger and remove the heat from the coolant from the lube oil. Water contains low solubility salts and sediments that deposit and build a stony scale on the inner tubes surfaces, causing fouling of the heat exchanger.

Fouling of the heat exchanger is causing

- Reduction of heat transfer from the oil lubricant.
- High consumption and maintenance costs.

Fig 3.1 heat exchanger for lube oil

Water contains minerals of Magnesium and Calcium that tend to deposit on hot surfaces.

$Mg\ (HCO_3)_2 \rightarrow MgCO_3 + CO_2 + H_2O$

$Ca\ (HCO_3)_2 \rightarrow CaCO_3 + CO_2 + H_2O$

Scale, fouling sediments can be found after 100-200 operation hours.

To solve the problem must be Keeping Heat Exchanging Tubes Always Clean.

3.2 Existing Solutions

Chemical cleaning by acids

- Shutting down and chemical-acid cleaning of the heat exchanger tubes.
- Frequent mechanical disassembly and acid cleaning of the heat exchanger tubes require excessive maintenance time.
- Acid can damage the tubes and the system.
- An additional backup unit is required to provide cooling while cleaning the system.
- Loss of production and cooling for days.
- Environmental problems due to the disposal of the chemicals.

3.3 Cooling Water Problems and Solutions

The primary objectives of cooling water treatment are to maintain the operating efficiency of the cooling water system and to protect the equipment that contacts the cooling water.

These objectives are accomplished by controlling or minimizing deposition, corrosion, and microbiological growth on the cooling water equipment.

The deposits that occur in cooling water systems are usually divided into two categories: scale and fouling.

The presence of either type of deposit in the heat exchangers or in the film fill can interfere with heat transfer, thereby reducing the efficiency of operation.

Deposits can also promote under-deposit corrosion.

Scale is formed from minerals, formerly dissolved in water, that were deposited from the water onto heat transfer surfaces or in-flow water lines.

As water is evaporated in a cooling tower, the concentration of dissolved solids becomes greater until the solubility of a particular scale-causing mineral salt is exceeded.

When this situation occurs in an untreated cooling water system, the scale will form on any surface in contact with the water, especially on heat transfer surfaces.

The most common scaling minerals are calcium carbonate (CaCo3), calcium phosphate (CaPo4), calcium sulfate (CaSo4), and silica, usually in that order.

Formation of magnesium silicate scale is also possible under certain conditions. Most other salts, including silica, are more soluble in hot water than in cold water; however, most calcium and magnesium salts, including calcium phosphate and calcium carbonate, are more soluble in cold water than in hot water.

This is called “reverse solubility.”

The water temperature will increase as recalculating water passes through the cooling system.

As a result, calcium and magnesium scales may form anywhere in the system, but most likely on heated surfaces such as heat exchangers or surface condensers. Silica will form in areas having the lowest water temperature, such as in the cooling tower fill.

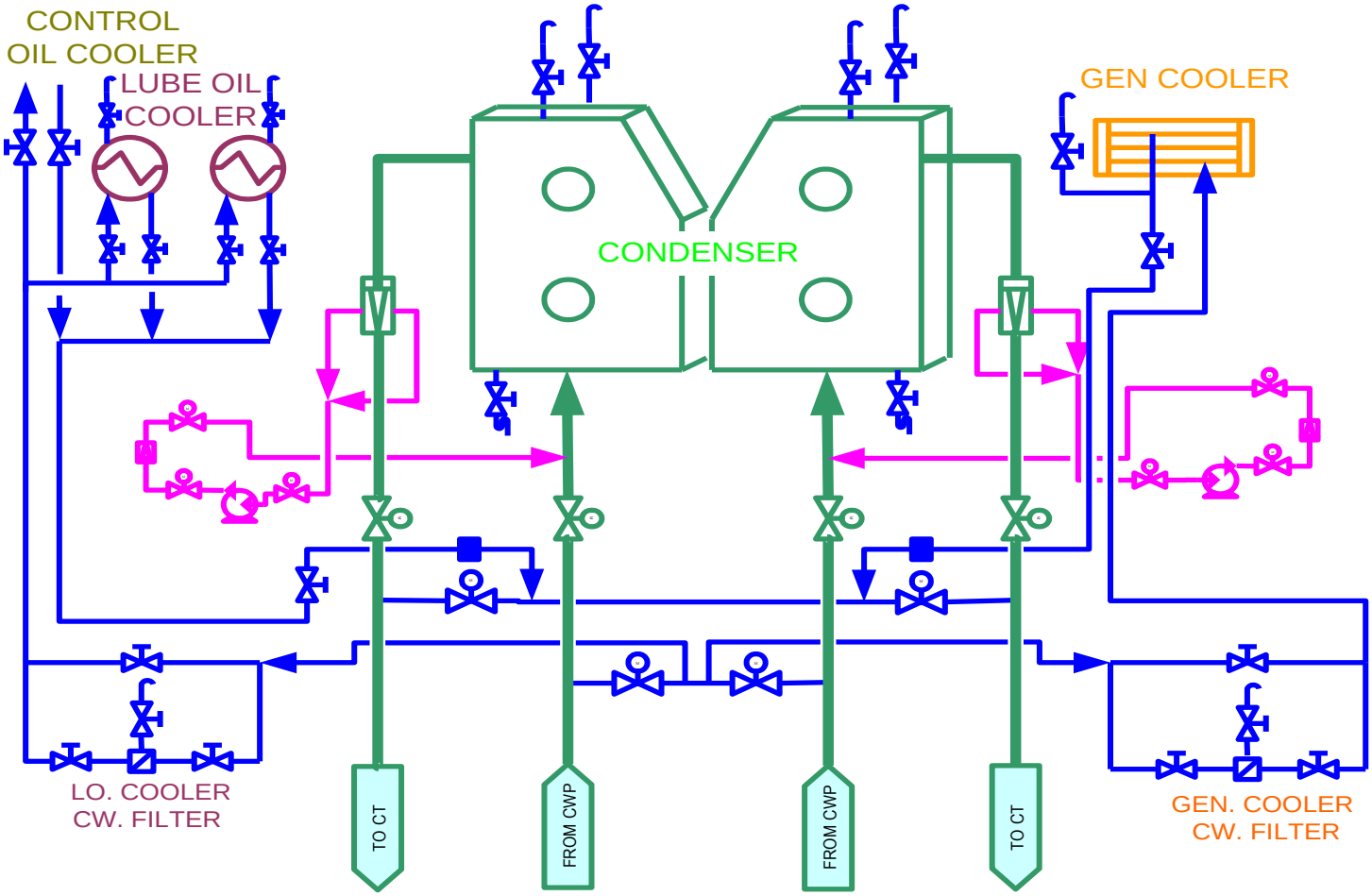

Fig 3.2 Circulating Water System

3.4 Critical Parameters

The critical parameters for cooling water are: conductivity, total dissolved solids (TDS), hardness, pH, and alkalinity and saturation index.

3.4.1 Conductivity and Total Dissolved Solids (TDS)

Is a measure of the ability of water to conduct electrical current and it indicates the amount of the dissolved solids (TDS) in water. Pure distilled water will have a very low conductivity (low minerals) and seawater will have a high conductivity (high minerals). Dissolved solids present no problem with respect to the cooling capacity of water, since the evaporation rate of seawater, which has 30,000ppm total dissolved solids, is only 1% less than that of distilled water.

The problem with dissolved solids is that many of the chemical compounds and elements in the water will combine to form highly

insoluble mineral deposits on the heat transfer surfaces generally referred to as “scale”.

The scale stubbornly sticks to the surfaces, gradually builds up and begins to interfere with pipe drainage, heat transfer and water pressure.

3.4.2 pH

Is a measure of how acidic/basic water is. The range goes from 0 - 14, with 7 being neutral. pHs of less than 7 indicate acidity, whereas a pH of greater than 7 indicates a base. pH is reported in "logarithmic units," like the Richter scale, which measures earthquakes.

In general, when pH points to acidic environment, the chances for corrosion increase and when pH points to alkaline environment, the chances for scale formation increase.

3.4.3 Alkalinity

The pH values above 7 signify alkalinity. At pH values less than 8.3, most of the alkalinity in the water is in the bicarbonate form, and scale formation is normally not a problem. However, when the pH rises above 8.3, the alkalinity converts from the bicarbonate to the carbonate and the scale will start to form.

3.4.4 Hardness

The amount of dissolved calcium and magnesium in water determines its "hardness." The total hardness is then broken down into two categories:

a. The carbonate or temporary hardness

b. The non-carbonate or permanent hardness

Hardness particularly the temporary hardness is the most common and is responsible for the deposition of calcium carbonate scale in pipes and equipment. Technically any bivalent metal ion such as iron, manganese or tin would constitute hardness, but calcium and magnesium are the two most prevalent forms. [11]

3.5 Problems of cooling water system

The following four problems are normally associated with cooling water systems.

3.5.1 Corrosion

Manufacturing of common metals used in cooling systems, such as mild steel, involves removing oxygen from the natural ore. Cooling water

systems are an ideal environment for the reversion of the metal to the original oxide state. This reversion process is called corrosion.

3.5.2 Scale

Minerals such as calcium carbonate, calcium phosphate, and magnesium silicate are relatively insoluble in water and can precipitate out of the water to form scale deposits when exposed to conditions commonly found in cooling water systems.

3.5.3 Fouling

The deposition of suspended material in heat exchange equipment is called fouling. Foul ants can come from external sources such as dust around a cooling tower or internal sources such as by-products of corrosion.

3.5.4 Biological Contamination

Cooling water systems provide an ideal environment for microbial organisms to grow, multiply, and cause deposit problems in heat exchange equipment.

Microbial growth can strongly influence corrosion, fouling, and scale formation, if not controlled properly.

Macro fouling can occur in once-through cooling systems or water intakes in lakes and rivers. Various species of clams, mussels, and other marine organisms can attach to the piping, reducing water flow and increasing corrosion.

Table 3.1 water cooling problem

Item of Problem	Reason	Solution &Control
Scale	• As alkalinity increases. • High TDS water.	• Adjusting pH to lower values. • Controlling cycles of concentration. •Physical water treatment methods – Filtration.

Corrosion	• Dissolved Oxygen. • Alkalinity & Acidity. • Total Dissolved Solids. • Microbial Growth. • Temperature • Water Velocity.	•Selecting suitable materials of construction to resist corrosion. • Adding protective film •Controlling scaling and micro-biological growth.

Elimination of "**biological fouling**" and prevention of the incubation of pathogens forms the third leg of the cooling water management triangle. There are many species of microorganisms (algae, protozoa, and bacteria) that can thrive in cooling systems under certain circumstances.

Table 3.2 impact of cooling water problem and solution

Micro-organisms	Impact on cooling tower system	Treatment Methods
Algae	• Provide a nutrient source for bacterial growth. • Deposit on surface contributes to localized corrosion process. • Loosened deposits can block and foul pipe work and other heat exchange surfaces.	• Oxidizing Biocide. Chlorine. • Sodium Hypochlorite. Bromine. • Iodine. •Ozone. • Hydrogen Peroxie.
Fungi	• Proliferate to high number and foul heat exchanger surfaces.	
Bacteria	• Some types of pathogenic bacteria such as Legionella may cause health hazards. • Sulphate reducing bacteria can reduce sulphate to corrosive hydrogen sulphide. • Cathodic depolarization by removal of hydrogen from the cathodic portion of corrosion cell. • Acid producing bacteria produce organic acids, which cause localized corrosion of deposit laden distribution piping and also provide the potential for severe pitting corrosion of heat exchanger surface.	

3.6 Effects of These Problems

If not properly controlled, these problems can have a direct, negative impact on the value of the entire process or operation.

Examples of problems that corrosion, deposition, and biological fouling can create are as follows:

• Increased maintenance cost.
• Equipment repair or replacement cost.
• More frequent shutdowns for cleaning and replacement of system components.
• Reduced heat transfer efficiency and therefore reduced energy efficiency of the process being cooled.

Table3.3 cooling water control limit

Parameter	Unit	Control limit
pH		**7.8-8.2**
Conductivity	**µS/cm**	**< 1,500**
Turbidity	**NTU**	**< 80**
Total Alkalinity	**ppm as $CaCO_3$**	**< 400**
Total Hardness	**ppm as $CaCO_3$**	**< 800**
Ca-Hardness	**ppm as $CaCO_3$**	**< 500**
Chloride	**ppm as Cl^-**	**< 200**
Silica	**ppm as SiO_2**	**< 150**
Total Iron	**ppm as Fe**	**< 3.0**
Total Phosphate	**ppm as PO_4**	**3 – 5**
Free Residue Chlorine	**ppm as Cl_2**	**0.5-1.0**
[Ca] x [SO_4]	**as ion**	**< 500,000**
[Mg] x [SiO_2]	**as ion**	**< 15,000**
Cycle of Concentration	**Cycle**	**5**
LSI	**-**	**Up to (+1.0)-(+1.5)**

3.7 Monitoring of Water Cooling in GARRI

Table 3.4 Monitoring of Water Cooling in December 2015

Description Day	PH Target 7.7-8.2	Conductivity Target<= 1500	Turbidity Target<= 100	Hardness Target=500
01/12/2015	8.37	1887	5.8	797
02/12/2015	8.44	1765	7.2	952
03/12/2015	8.19	1898	5.0	1046
06/12/2015	8.5	1965	6.5	806
07/12/2015	8.55	1972	7.2	985
08/12/2015	8.55	2040	6.4	1067
09/12/2015	8.4	1889	9.1	801
10/12/2015	8.38	1892	9.3	915
13/12/2015	8.24	1807	8.6	767
14/12/2015	8.13	1742	8.4	774
15/12/2015	8.1	1792	8.3	883
16/12/2015	8.31	1677	8.5	778
17/12/2015	8.24	1530	7.8	767
20/12/2015	8.49	1367	8.2	535
21/12/2015	8.58	1417	8.4	638
22/12/2015	8.3	1333	6.5	649
23/12/2015	8.22	1355	5.6	649
27/12/2015	8.33	1251	7.2	668
28/12/2015	8.28	1305	5.8	587
29/12/2015	8.3	1359	6.9	608
30/12/2015	8.37	1099	7.2	531
31/12/2015	8.4	1117	9.5	647

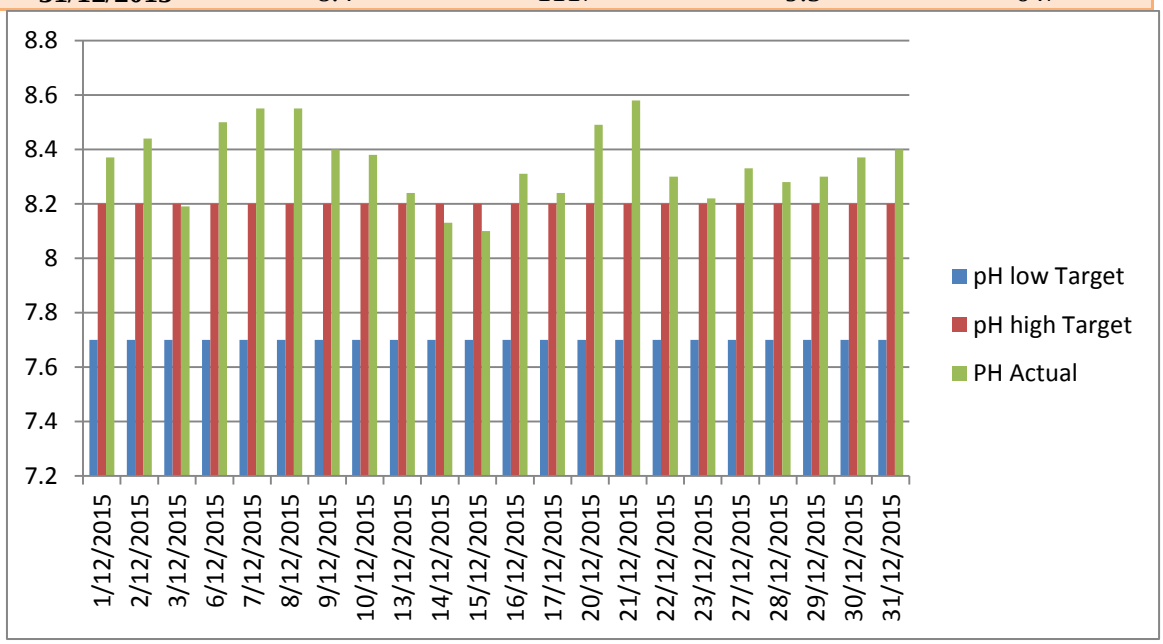

Fig 3.3 PH Measurement of December 2015

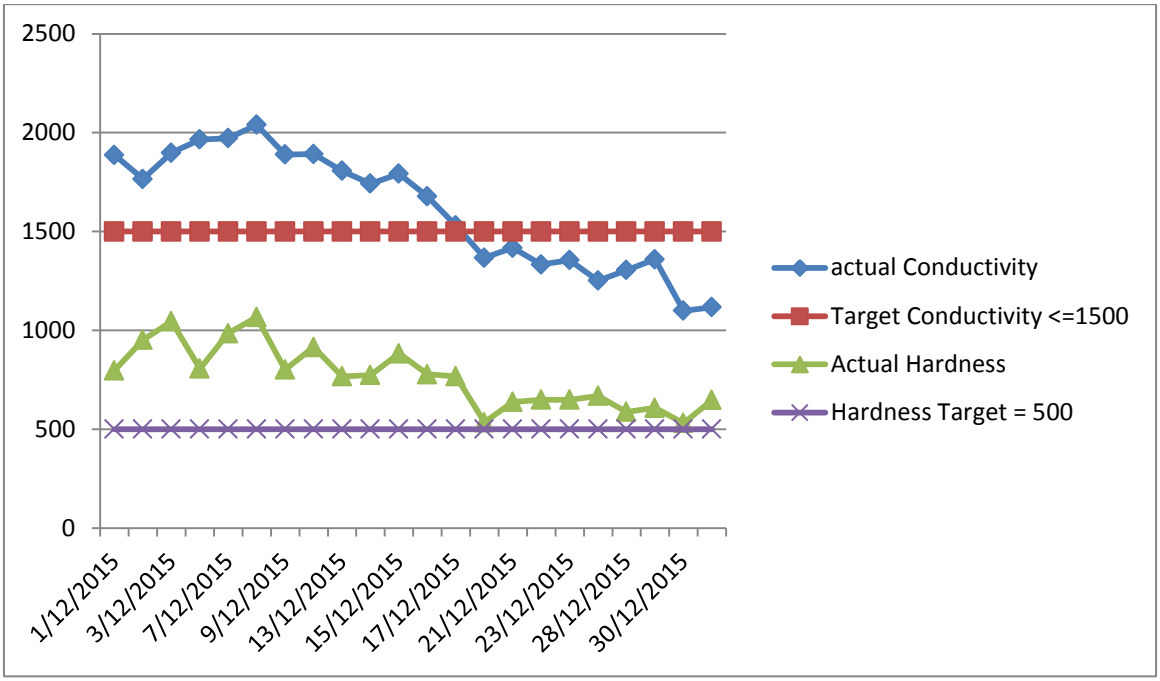

Fig 3.4 Measurement for Conductivity &Hardness December 2015

Table 3.5 Monitoring of Water Cooling in January 2016

Description Day	PH Target 7.7-8.2	Conductivity Target<= 1500	Turbidity Target<= 100	Hardness Target=500
03/01/2016	8.44	1162	1.9	633
04/01/2016	8.51	1182	1.66	620
05/01/2016	8.49	1105	1.81	549
06/01/2016	8.49	1093	1.94	579
07/01/2016	8.53	1067	1.9	579
10/01/2016	8.59	1006	1.74	488
11/01/2016	8.56	1041	2.03	458
12/01/2016	8.61	1071	2.06	522
13/01/2016	8.56	1076	1.81	462
14/01/2016	8.61	1120	2.11	436
18/01/2016	8.59	1050	2.16	564
19/01/2016	8.57	1029	1.85	588
20/01/2016	8.08	1109	2.52	529
21/01/2016	8.3	1174	2.05	604
24/01/2016	8.49	908	3.54	476
25/01/2016	8.5	815	4.14	390
26/01/2016	8.3	743	3.01	377
27/01/2016	8.26	713	2.56	731
28/01/2016	8.26	700	2.53	324
31/01/2016	8.27	750	2.19	398

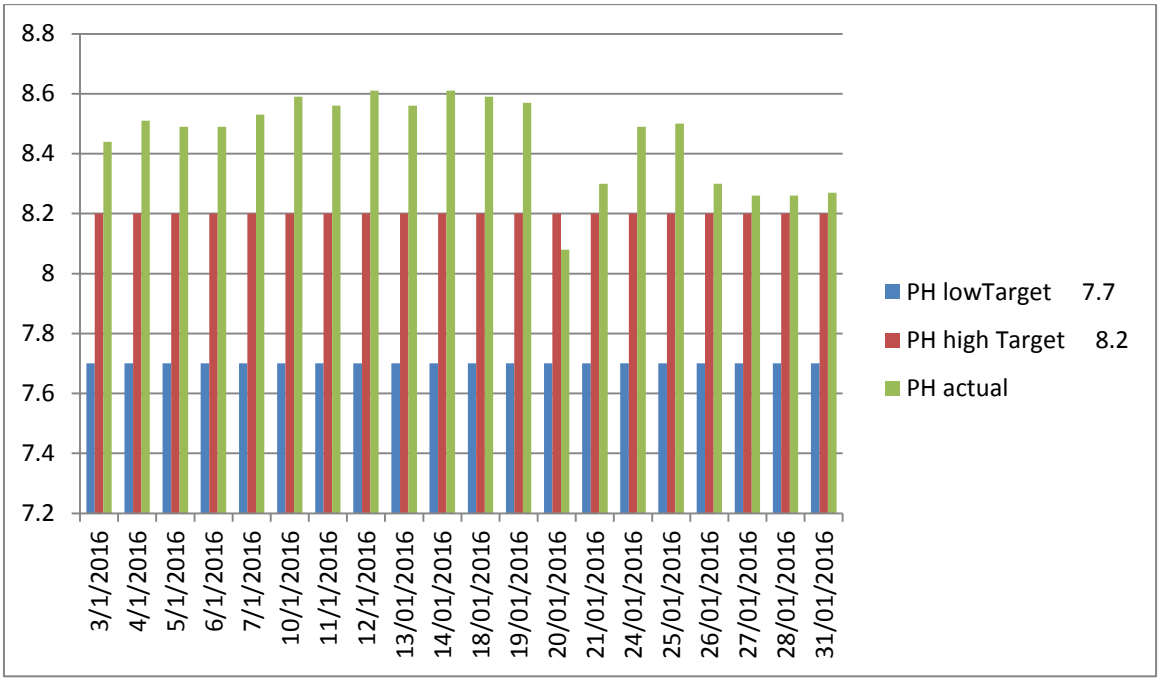

Fig 3.5 PH Measurement of January 2016

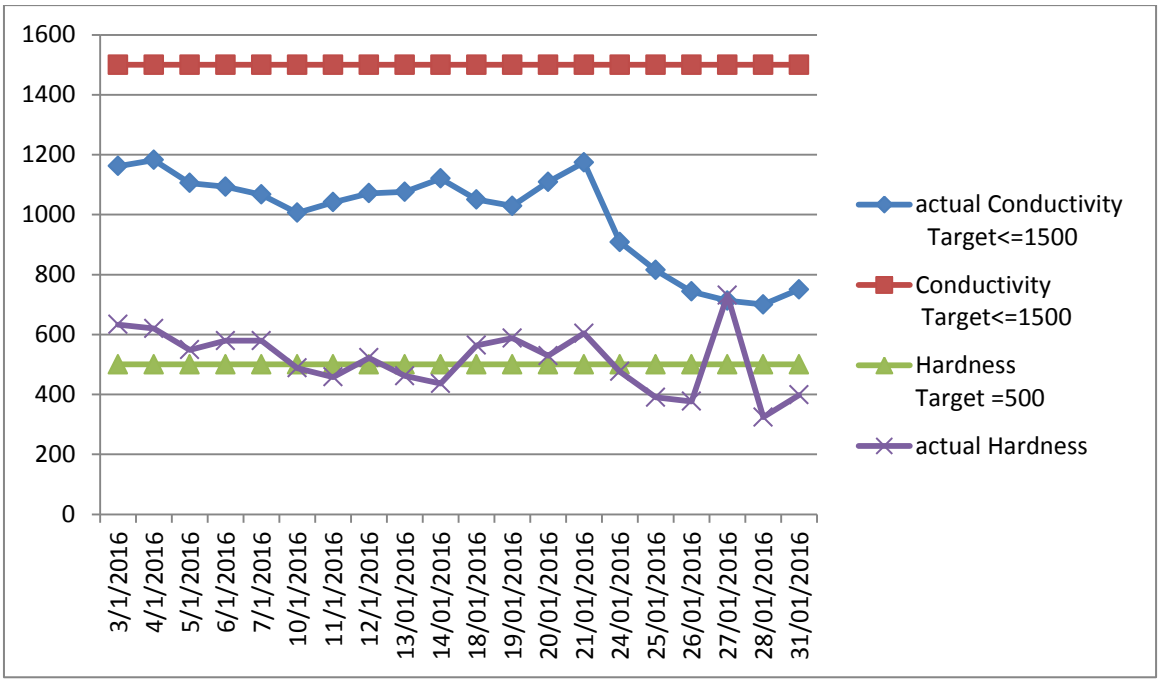

Fig 3.6 Measurement for Conductivity &Hardness of January 2015

Table 3.6 Monitoring of Water Cooling in February 2016

Description Day	PH Target 7.7-8.2	Conductivity Target<= 1500	Turbidity Target<= 100	Hardness Target=500
01/02	8.38	744	2.22	411
02/02	8.37	767	2.11	430
03/02	8.54	813	4.18	412
04/02	8.54	781	3.12	395
07/02	8.5	766	3.8	407
08/02	8.51	767	2.25	388
09/02	8.53	794	1.86	398
10/02	8.29	769	1.58	312
11/02	8.36	719	1.49	334
14/02	8.53	662	1.54	252
15/02	8.6	649	1.48	249.5
16/02	8.63	645	1.5	327
17/02	8.47	675	9.98	322
18/02	8.03	805	9.83	323
21/02	8.7	1089	5.11	538
22/02	8.57	1124	8.72	538
23/02	8.68	1116	9.06	517
24/02	8.71	1239	9.07	470
25/02	8.41	1130	5.58	508
28/02	8.68	1311	5.04	532
29/02	8.54	1336	4.79	558

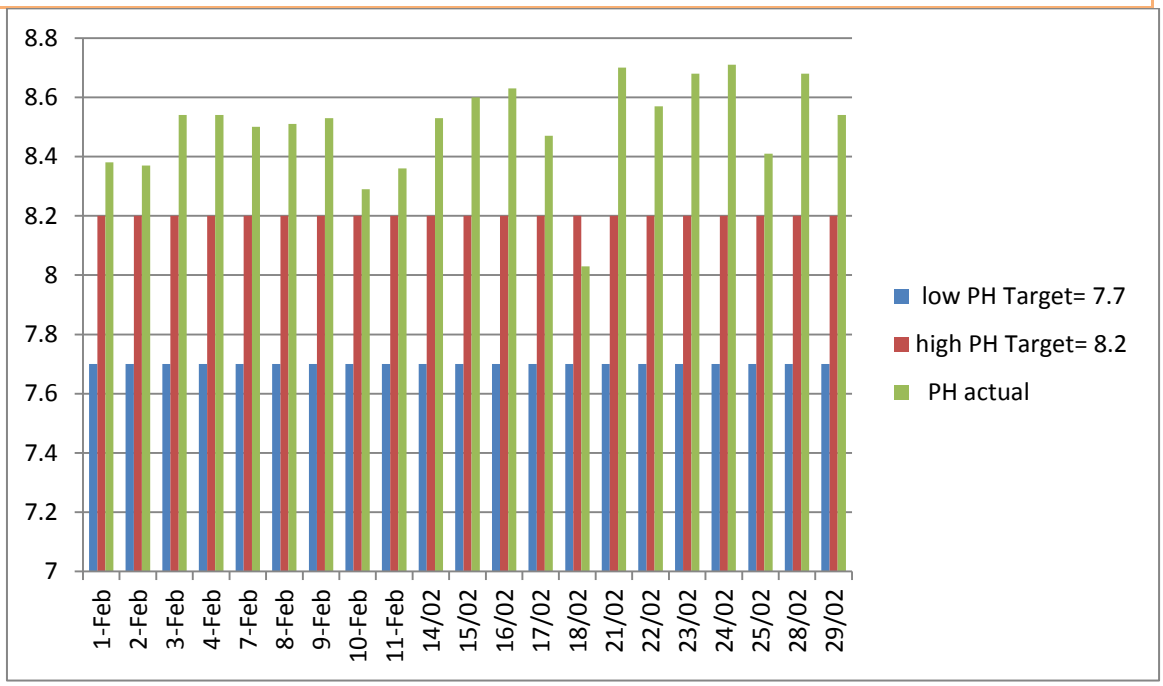

Fig 3.7 PH Measurement of February 2016

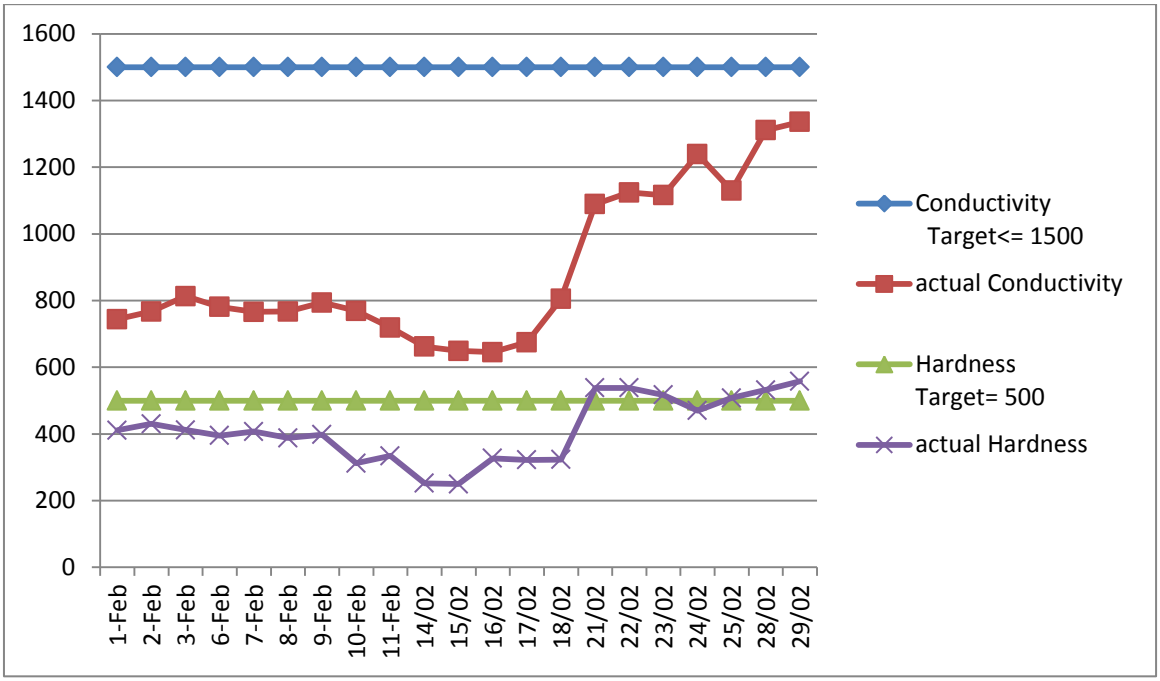

Fig 3.8 Measurement for Conductivity &Hardness of February 2015

3.8 Alternative system

3.8.1 Closed loop systems

In a closed system, there is very little or no loss of water into a known volume as system water remains in the piping. Little, if any, make-up water is required to maintain a filled system as little or none is lost through evaporation or steaming as in an open system where the water content of the system is open, at some point, to the atmosphere. In addition, the closed loop systems are pressurized at all times so that excess air can be eliminated through simple automatic air venting devices.

The water treatment in closed system is thus not very critical. Once the initial volume is chemically treated, the quality of the circulating fluid needs to be monitored on a regular basis and additional chemicals added as required to maintain recommended residual concentrations of treatment chemicals.

3.8.2 New System Design Needed

It will change the oil cooling system, cooling water through the replacement of water treatment and supply only to control the processing.

And this is through the use of a closed cooling system, this system contains:

- Heat Exchanger.
- Store treated water cooling.
- Pumps to inject cooling water treatment.
- Pipes and valves for water control.
- Use the next cooling water from the cooling towers to cool the treatment of cooling water.
- Pumps to compensate for the treatment of cooling water.

3.8.2.1 Heat Exchanger

3.8.2.1.1Introduction

Heat exchanger is a device in which transfer of thermal energy takes place between two of more fluids across a solid surface. These exchangers are classified according to construction, flow arrangement; number of fluids, compactness, etc. The use of heat exchanger gives higher thermal efficiency to the system. In many applications like power plants, petrochemical industries, air conditioning etc. [12]

Gasket plate heat exchangers (PHEs) are widely used in dairy and food processing plants, chemical industries, power plants and central cooling systems. They exhibit excellent heat transfer characteristics, which allows a very compact design, and can be easily dismounted for maintenance, cleaning or for modifying the heat transfer area by adding or removing plates. [13]

The plate heat exchanger (PHE) is a specialized design well suited to transfer heat between medium and low-pressure fluids.
Stainless steel is a commonly used metal for the plates because of its ability to withstand high temperatures, its strength, and its corrosion resistance.

The plates are often spaced by rubber sealing gaskets which are cemented into a section around the edge of the plates.

The plates are pressed to form troughs at right angles to the direction of flow of the liquid which runs through the channels in the heat exchanger. These troughs are arranged so that they interlink with the other plates which forms the channel with gaps of 1.3–1.5 mm between the plates.

Arrangement of PHE & Flow through PHE and construction of plate is shown in figure.

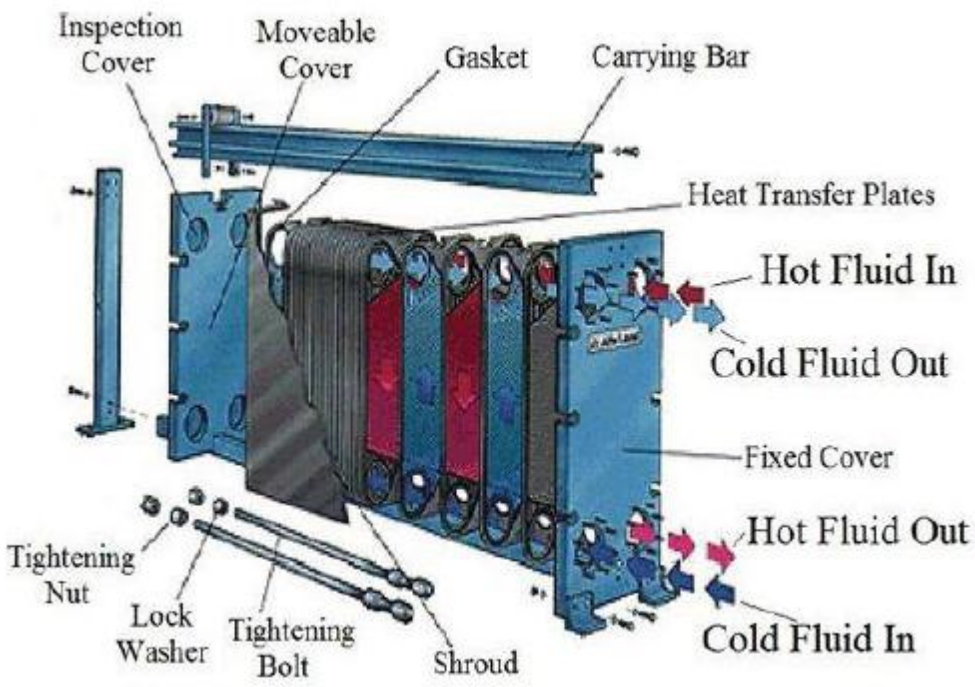

Fig3.9plat heat exchanger

3.8.2.1.2Physical Parameters Affecting Plate Heat Exchanger

The six most important parameters are as follows:

• The amount of heat to be transferred (heat load).
• The inlet and outlet temperatures on the primary and secondary sides.
• The maximum allowable pressure drop on the primary and secondary sides.
• The maximum operating temperature.
• The maximum operating pressure.
• The flow rate on the primary and secondary sides.

Temperature Program:

This means the inlet and outlet temperatures of both media in the heat exchanger.

3.8.2.1.2.1 Heat Load

Disregarding heat losses to the atmosphere, which are negligible, the heat lost (heat load) by one side of a plate heat exchanger is equal to the heat gained by the other. The heat load (P) is expressed in kW or kcal/h.

3.8.2.1.2.2 Logarithmic Mean Temperature Difference

Logarithmic mean temperature difference (LMTD) is the effective driving force in the heat exchanger.

3.8.2.1.2.3 Density

Density (ρ) is the mass per unit volume and is expressed in kg/m^3 or kg/dm^3.

3.8.2.1.2.4 Flow Rate

This can be expressed in two different terms, either by weight or by volume. The units of flow by weight are in kg/s or kg/h, the units of flow by volume in m^3/h or l/min. To convert units of volume into units of weight, it is necessary to multiply the volume flow by the density.

3.8.2.1.2.5 Pressure Drop

Pressure drop (Δp) is in direct relationship to the size of the plate heat exchanger. If it is possible to increase the allowable pressure drop, and incidentally accept higher pumping costs, then the heat exchanger will be smaller and less expensive. As a guide, allowable pressure drops between 20 and 100 kPa are accepted as normal for water/water duties.

3.8.2.1.2.6 Specific Heat

Specific heat (cp) is the amount of energy required to raise 1kg of a substance by one degree centigrade. The specific heat of water at 20°C is 4.182 kJ/kg °C or 1.0 kcal/kg °C.

3.8.2.1.2.7 Overall Heat Transfer Coefficient

Overall heat transfer coefficient (U) is a measure of the resistance to heat flow, made up of the resistances caused by the plate material, amount of fouling, nature of the fluids and type of exchanger used. Overall heat transfer coefficient is expressed as W/m^2 °C or kcal/h, m^2 °C. [14]

3.8.2.2 Design Methodology

The goal of heat exchanger design is to relate the inlet and outlet temperatures, the overall heat transfer coefficient, and the geometry of the heat exchanger, to the rate of heat transfer between the two fluids.

The two most common heat exchanger design problems are those of rating and sizing.

We will limit ourselves to the design of recuperates only.

That is, the design of a two fluid heat exchanger used for the purposes of food pasteurization.

Two approaches to heat exchanger design that will be discussed are the LMTD method and NTU method.

Each of these methods has particular advantages depending upon the nature of the problem specification.

3.8.2.2.1Shell and tube heat exchanger

Step:

1. For shell side is contain the oil lubricant, the mass flow &specific heat is known.
2. For shell side assume the design normal temperature in and out for oil, T_i &T_o.
3. Assume the log Mean correction factor F_t
4. Calculated the specific heats, for constant specific heats with no change of phase, we may also write with a heat balance, the unknown process variable (flow rate or temperature) of one of the streams can be found.

$$Q_c = \left(mc_p\right)_c \left(T_{co} - T_{ci}\right) \qquad (3.1)$$

$$Q_h = \left(mc_p\right)_h \left(T_{hi} - T_{ho}\right) \qquad (3.2)$$

Now from energy conservation we know that

$$Q_c = Q_h = Q \qquad (3.3)$$

5. For tube side is contain water treatment, the specific heat, length of tube, outlet diameter tube and number of tube.
6. Calculated the total area of tube side heat exchanger.

$$A = N_t \times \pi \times D_o \times L \qquad (3.4)$$

7. Calculated the LMTD

$$LMTD = \frac{\Delta T_1 - \Delta T_2}{ln\left(\frac{\Delta T_1}{\Delta T_2}\right)}$$

$$LMTD = \frac{(T_{hi} - T_{co}) - (T_{ho} - T_{ci})}{ln\left(\frac{T_{hi} - T_{co}}{T_{ho} - T_{ci}}\right)} \quad (3.5)$$

8. Calculated the outlet water treatment from the tube side Tc_o.
9. Calculated the mass flow of water treatment m_c.

3.8.2.2.2Plate heat exchanger design

Step:

3.8.2.2.2.1For raw water

1. The specific heat, water temperature to PHE from cooling tower is known.
2. Calculated the Raw water temperature out to cooling tower.
3. Calculated the LMTD.
4. Calculated the average temperature.

$$T_f = \frac{T_i + T_o}{2} \quad (3.6)$$

5. Assume for PHE, width of plate, high of plate, distance between two plates and thickness of plate.
6. Calculated the area of PHE.

$$A = H \times W \quad (3.7)$$

7. Find the water properties from the water table, M_f, cp_c, k, k and P_r.
8. Calculated the velocity.

$$\rho = \frac{\dot{m}}{\dot{V}} = \frac{\dot{m}}{A \times V} \quad (3.8)$$

9. Calculated the equivalent diameter.

$$D_e = 2b \quad (3.9)$$

10. Calculated the Reynolds number.

$$Re = \frac{\rho \times v \times d}{M_f} \quad (3.10)$$

11. From the table of equations for flow over flat plate selection the equation and find the Nusslet number

$$Nu = 0.0288 \times Re^{0.8} \times Pr^{1/3} \quad (3.11)$$

12. Calculated heat transfer

$$Nu = \frac{h\ De}{k} \quad (3.12)$$

13. Calculated Pressure drop (ΔP),

$$\Delta Pt = \frac{4\rho u^2}{2} \quad (3.13)$$

Step:

3.8.2.2.2.2For Treatment Water (Demine Water)

1. The specific heat, water temperature to PHE from oil cooler & to oil cooler.
2. Calculated the average temperature.

$$T_f = \frac{T_i + T_o}{2} \quad (3.14)$$

3. Calculated the area of PHE.

$$A = H \times W \quad (3.15)$$

4. Find the water properties from the water table, M_f, cp_c, k, k and P_r.
5. Calculated the velocity.

$$\rho = \frac{\dot{m}}{\dot{V}} = \frac{\dot{m}}{A \times V} \quad (3.16)$$

6. Calculated the equivalent diameter.

$$D_e = 2b \quad (3.17)$$

7. Calculated the Reynolds number.

$$Re = \frac{\rho \times v \times d}{M_f} \quad (3.18)$$

8. From the table of equations for flow over flat plate selection the equation and find the Nusslet number

$$Nu = 0.0288 \times Re^{0.8} \times Pr^{1/3} \quad (3.19)$$

9. Calculated heat transfer

$$Nu = \frac{h\ De}{k} \quad (3.20)$$

10. Calculated Pressure drop (ΔP),

$$\Delta Pt = \frac{4\rho u^2}{2} \quad (3.21)$$

11. Calculated effectiveness of PHE

$$\in = \frac{C_{hin}(T_{hin} - T_{out})}{C_{min}(T_{hin} - T_{cin})} \quad (3.22)$$

12. Calculated the Overall heat transfer

$$\frac{1}{u} = \frac{1}{h_c} + \frac{x}{k} + \frac{1}{h} \quad (3.23)$$

13. Calculated the corrective factor

$$P = \frac{T_{c2} - T_{c1}}{T_{h1} - T_{c1}} \quad R = \frac{T_{h1} - T_{h2}}{T_{c2} - T_{c1}} \quad (3.24)$$

14. Calculated the total Area

$$Q=F\times U\times A_t \times LMTD \quad (3.25)$$

3.8.2.2.3 Store treated water cooling

The store to save the cooling water treatment, it use to cooling in lubricant, in theses selecting the size it enough to save and operate.

3.8.2.2.4Pumps to inject cooling water treatment

That pump it is selecting for the raw water pump and treated water pump that constructed of total head for pump and the flow of water.

Power = $W\times \dot{V}\times H$ Kw

Pressure = $\rho\times g\times H$ bar

Flow Rate = $\frac{m}{\rho}$ m^3/hr

3.8.2.2.5Pumps to compensate for the treatment of cooling water

That pump is use to the charging the losses water, it drag from the makeup tank of water treatment to the store treated water cooling design.

3.8.2.2.6Pipes and valves for water control

The pipe and the valve it is selection to connection and control in the system.

4.1Design of shell and tube heat exchanger

4.1.1Shell Side (Hot fluid "oil")

$\dot{m}_h$ = 25 kg/s
From capacity of main oil pump 1741 L/min

C_{ph} =1.92kJ/kg k
T_{hi} = 70 °C "Measurement Actual"
T_{ho} = 49 °C "Designer"
$Q=m\times c_p\times\Delta T$
$Q_h=25\times1.92\times(70-49)$ = 1008 KW

4.1.2Tube Side (Cold fluid "Demine Water")

T_{ci}= 33 °C "Designer"
C_{pc} =4.18kJ/kg k
$\dot{m}_c$ =?
T_{co} =?
L = 300cm
D_o= 4 cm
N_t = 426
$A = N_t\times\pi\times D_o\times L$
$A = 426\times\pi\times0.04\times3 = 160\ m^2$

The overall heat transfer from Appendix (B) Figure 3

$U=300 w/m^2k$

$Q = U\times A_o\times LMTD$

$1008*10^3=300\times160\times$ LMTD

LMTD = 21 °C

$$LMTD = \frac{\Delta T_1-\Delta T_2}{\ln(\frac{\Delta T_1}{\Delta T_2})} = \frac{(T_{hi}-T_{co})-(T_{ho}-T_{ci})}{ln\left(\frac{T_{hi}-T_{co}}{T_{ho}-T_{ci}}\right)}$$

$$LMTD = \frac{(70-T_{co})-(49-33)}{\ln(\frac{70-T_{co}}{49-33})}$$

$$LMTD = \frac{(54-T_{co})}{\ln(\frac{70-T_{co}}{16})} = 21$$

T_{co} = 43 ºC

Q=$\dot{m}_c$ ×c_p×ΔT
1008*10^3= m×4.18×1000*(43 – 33)

$\dot{m}_c$ = 24.11kg/s

4.2Design of plate heat exchanger

4.2.1Cold fluid (raw water)

$\dot{m}_c$=180 kg/s

From capacity of raw water pump 650m^3/hr

$T_{C\ in}$ =31 ºC

Q=$\dot{m}_c$ ×cp×ΔT

1008*10^3=180×4.18×1000× ($T_{C\ out}$ - 31)

$T_{C\ out}$ =32.5 ºC

LMTD = 21 ºC

$T_f = \frac{(T_i+T_o}{2} = \frac{31+32.5}{2}$ = 31.75 ºC

For plate assume

W =0.4 = width of plate in m,
H =1.0 = high of plate m,
b = 0.007 = distance between two plates in m,

x= 0.005 = thickness of plate

From appendix (C) Figure 1

$M_{f=}$ 0.7691 * 10−6 Pa.s

C_{pc} = 4.178325 kJ/kg k

k = 0.6158 w/m k

P_r =5.221

From appendix (D) Figure 1, 2

ρ= 995.065 kg/m^3

Re = $\frac{\rho\, v\, d}{M_f}$

A=H×W =1.2×0.8= 0.96m^2

$\rho = \frac{m}{\dot{V}} = \frac{m}{A \times V}$

995.065 = $\frac{180}{0.96 \times v}$

V=0.188 m/s

D_e = 2b =2×0.007=0.014m

Re = $\frac{995.065 \times 0.188 \times 0.014}{0.7691 \times 10-6}$ = 3.4×10^6

From appendix (E) Figure 1

Re > 5×10^5 & p_r >0.5

Nu =0.0288× Re$^{0.8}$×Pr$^{1/3}$

Nu = 0.0288 (3.4×10^6)$^{0.8}$ (5.221)$^{1/3}$ =8391.25

Nu=$\frac{h\ De}{k}$ ⟹ $h_h = \frac{k\ Nu}{De} = \frac{0.6158 * 8391.25}{0.014}$ =369 kw/m^2 k

$\Delta Pt = \frac{4\rho u^2}{2} = \frac{4 \times 995.065 \times (0.188)2}{2}$=70.3 pa.s

4.2.2Hot fluid (demine water)

$\dot{m}_h$ = 24.11kg/s

T_{hi} = 43 ºC

T_{ho} = 33 ºC

$T_f = \frac{43+33}{2}$ = 38 Cº

From appendix (C) Figure 1

M $_{f\,=}$ 0.679* 10−6 Pa.s

C_{pc} = 4.1784 kJ/kg k

k = 0.6246 w/m k

P_r =4.54

From appendix (D) Figure 1, 2

ρ= 992.965 kg/m^3

$Re=\frac{\rho\ v\ d}{M_f}$

$\rho=\frac{m}{\dot{V}}$

$992.965 =\frac{24.11}{0.96\times v}$

V=0.025 m/s

$Re = \frac{992.965\times0.025\times0.014}{0.679\times 10-6} =5.11\times10^5$

From appendix (E) Figure 1

$Re > 5\times10^5$ & $p_r > 0.5$

$Nu =0.0288\times Re^{0.8}\times Pr^{1/3}$

$Nu = 0.0288\ (5.11\times10^5)^{0.8}\ (4.54)^{1/3} =1758$

$Nu=\frac{h\ De}{k} \Longrightarrow h_h =\frac{k\ Nu}{De}=\frac{0.6246*1758}{0.014} = 78.4 kw/m^2\ k$

$\Delta Pt = \frac{4\times992.965\times(0.025)2}{2}$=1.24pa.s

$C_h=m_h\ c_{ph}=24.11\times4.18=100.8$

$Cc=m_c\ c_{pc}=180\times4.18=752.4$

$\in= \frac{C_{hin}(T_{hin}-T_{out})}{C_{min}(T_{hin}-T_{cin})}= \frac{24.11\times4.18(43-33)}{24.11\times4.18(43-31)} =0.83$

From appendix (E) Figure 2

k=237 w/m k "Aluminum Material"

$\frac{1}{u} =\frac{1}{h_c} + \frac{x}{k} + \frac{1}{h}$

$\frac{1}{u} = \frac{1}{369000} +\frac{0.005}{237}+\frac{1}{78400}$

$U=39.86 kw/m^2 k$

$Q=F\times U\times A_t\times LMTD$

$LMTD=\frac{(43-32.5)-(33-31)}{\ln(\frac{43-32.5}{33-31})}=5.1^{o}C$

$P=\frac{T_{c2}-T_{c1}}{T_{h1}-T_{c1}}=\frac{32.5-31}{43-31}=0.125$

$R=\frac{T_{h1}-T_{h2}}{T_{c2}-T_{c1}}=\frac{43-33}{32.5-31}=6.67$

From appendix (E) Figure 3

F=0.95

F=0.95 from the chart

$1008\times10^3=0.95\times39.86\times10^3\times A_t\times5.1$

$A_t=5.21m^2$

$A_{total}=5.21m^2$

$N=\frac{At}{A}=5.21/0.4$

Number of plate= 14 plate

Fig 4.1 Plate heat exchanger

4.3Auxiliary system

4.3.1Store treated water cooling make up

The size of tank 500m^3 it is find in the plant.

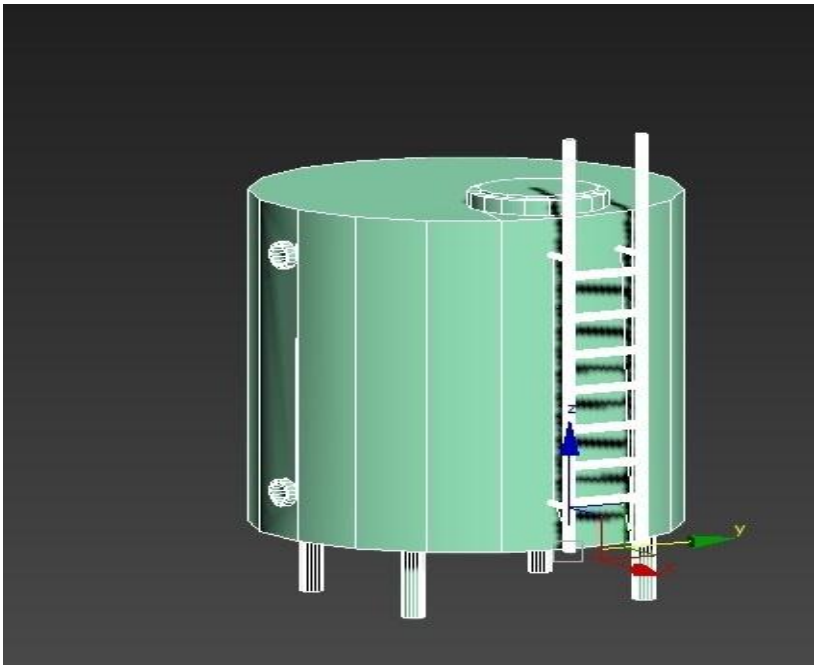

Fig 4.2 Tank for demine water make up

4.3.2Store treated water cooling

Selection size of tank 20m^3

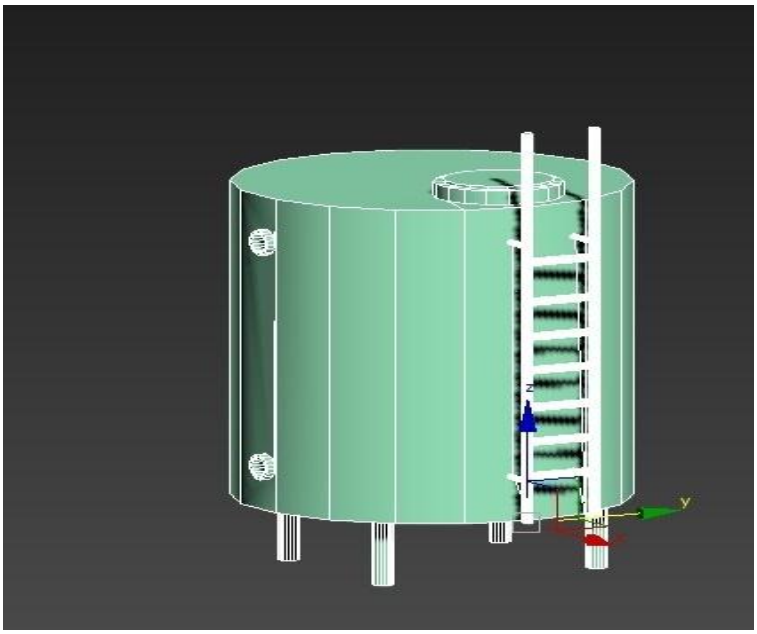

Fig 4.3 Tank for water treatment

4.3.3Pumps to inject cooling water

4.3.3.1Demine water

$\dot{m}$ = 24.11kg/s

ρ= 992.965 kg/m^3

H=15m

Flow Rate = $\frac{m}{\rho}$=$\frac{24.11\times3600}{992.965}$=87.4m^3/hr

Power = W×Q×H=992.965×9.81× $\frac{24.11}{992.965}$ ×15=3.6kw
Pressure = ρ×g×H=992.965×9.81×15= 1.46bar

4.3.3.2Raw water

$\dot{m}$ = 180kg/s

ρ= 995.065 kg/m^3

H=20m

Flow Rate = $\frac{m}{\rho}$=$\frac{180*3600}{995.065}$=650m^3/hr

Power = W×Q×H =995.065×9.81× $\frac{180}{993.771}$ ×20=35kw
Pressure = ρ×g×H =995.065×9.81×20= 1.95bar

4.3.4Pumps to compensate for the treatment of cooling water

Selecting the flow5kg/s to the pump

ρ= 992.965 kg/m^3

H=5m

Flow Rate = m/ρ=$\frac{5*3600}{992.965}$=18m^3/hr

Power = W×Q×H=991.336×9.81× $\frac{5}{992.965}$ ×5=0.245kw
Pressure = ρ×g×H=992.965×9.81×5= 0.487bar

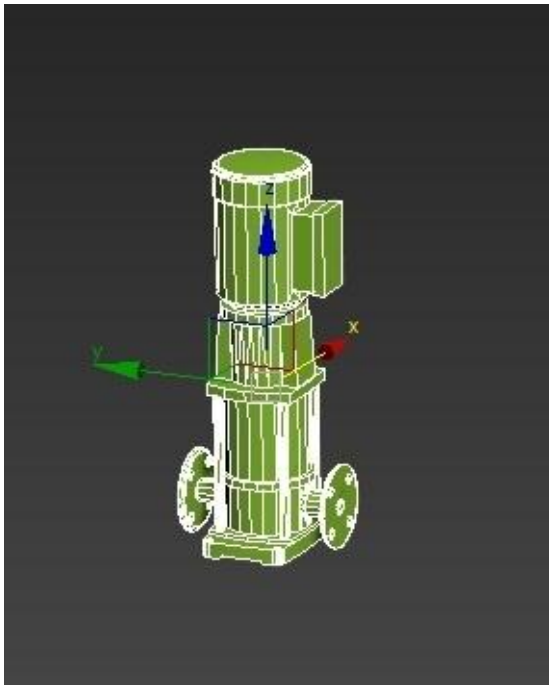

Fig 4.4 pump module

4.3.5Pipes and valves for water control

For the pipe selection stainless steel because the high resistant to corrosion, [DN 80, PN10], for the valve [DN 80, PN10], to control for the water.

Fig 4.5 control valve module

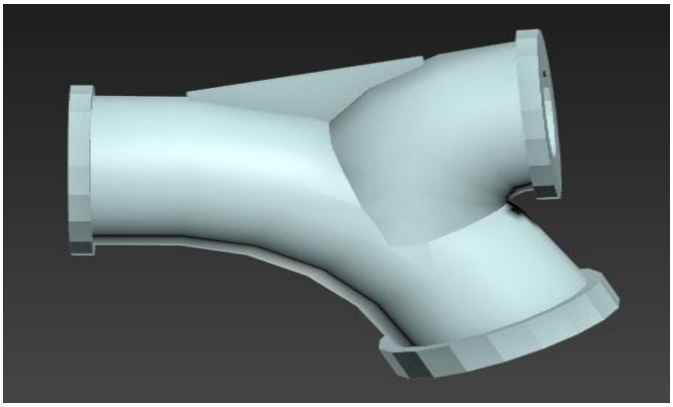

Fig 4.6 strainer module

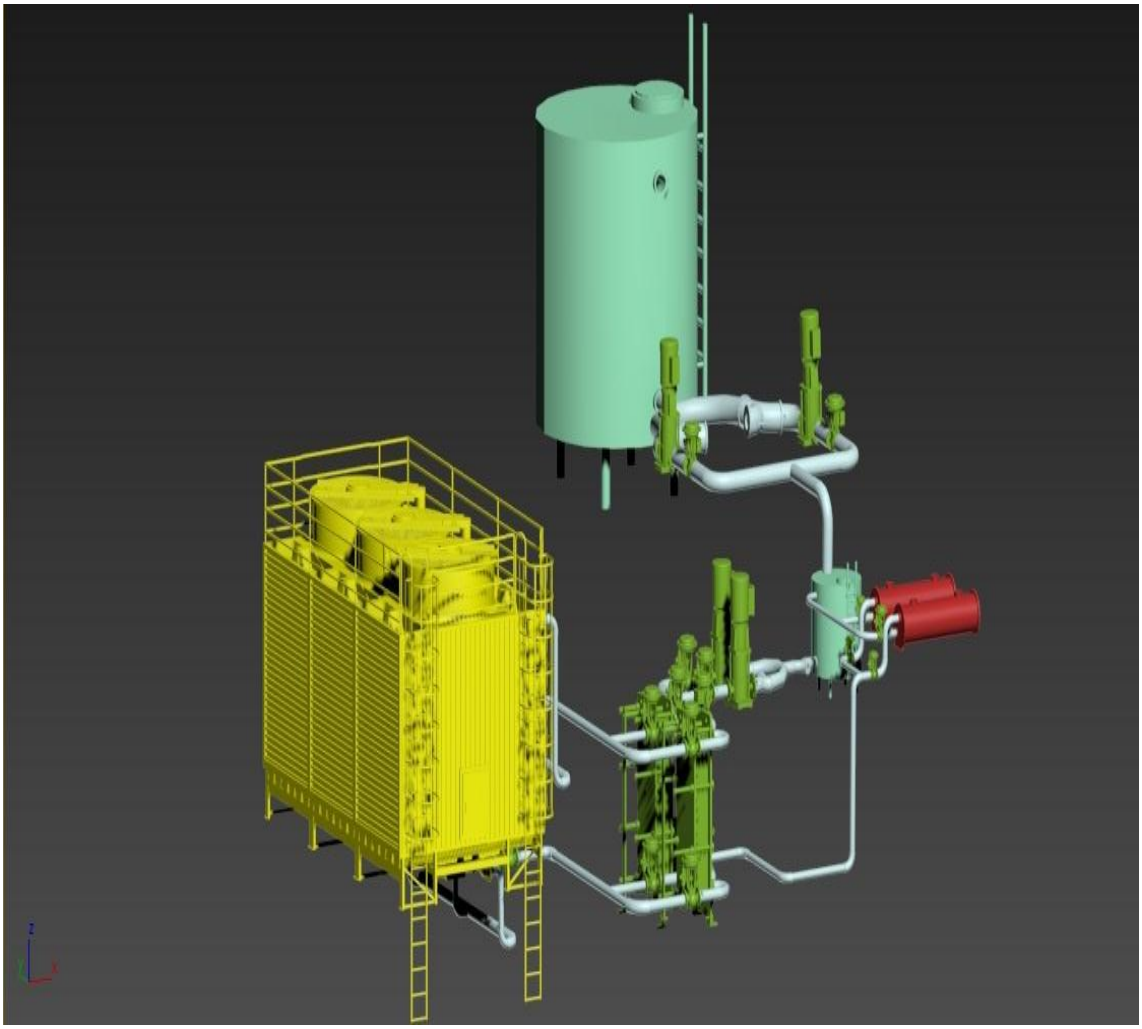

Fig 4.**7**side sketch for new design of system cooling module

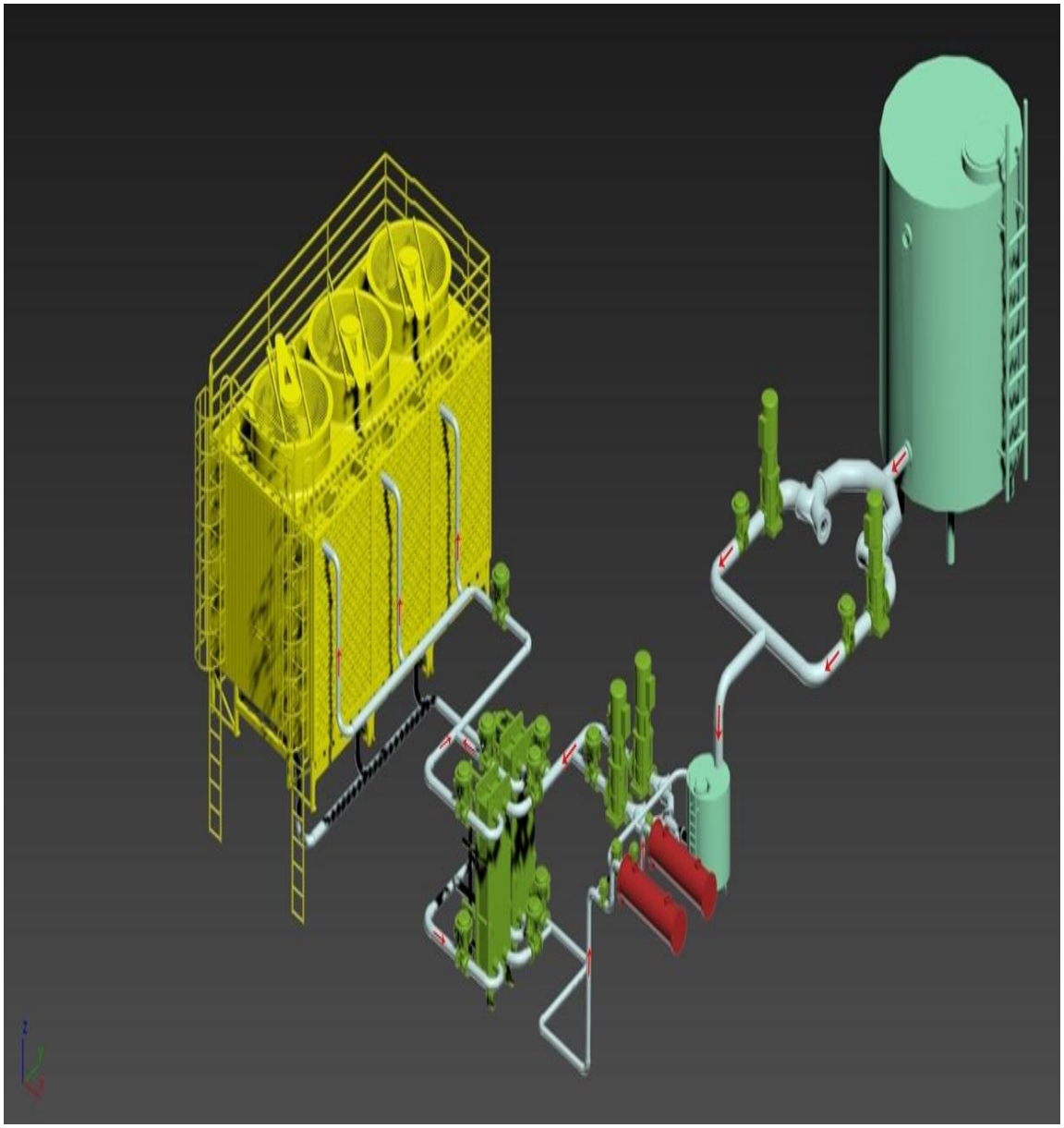

Fig 4.8 Top sketch for new design of system cooling module

4.4 Selection of Plate Heat Exchanger

The choosers of the heat exchanger, which is designed it is take from"A product catalogue for comfort heating and cooling from Alfa Laval plate heat exchangers".

Model, frame	M15EFD8	TS20MFM	TS20MFG	TS20MFS	M20MFM
Height, H, (mm)	1980	1405	1405	1435	2100
Width, W, (mm)	650	740	800	800	780
Vertical connection dist., VC, (mm)	1294	698	698	698	1478
Horizontal connection dist., HC, (mm)	304	363	363	363	353
Connection size, pipe (inch)	-	-	-	-	-
Connection size, flange (mm)	140	200	200	200	210
Max flow rate, (kg/s)	65	190	190	190	180
Max temperature, (ºC)	60	180	180	180	160
Max pressure, (brag)	30	10	16	30	30
Flow principle	Parallel	Parallel	Parallel	Parallel	Parallel

Table 4.1 Alfa Laval plate heat exchangers

4.5Cost Optimization

4.5.1Plate heat exchanger

Price of PHE=850$ ⟹

The total=850×2=1700$

4.5.2Auxiliary equipment

Price of small rate pump =11000$ ⟹

The total=22000$

Price of high rate pump =19000$ ⟹

The total=38000$

Price of control valve=1820$ ⟹

The total of valves=12×1820=21840$

Price of strainer=340$ ⟹

The total=340×4=1360$

Price of tank=7000$

Price of 1m from the pipe=15$ ⟹

The total=100×15=1500$

Price of 90º ELBOWS =30$=10*30=300$

Price of 45º ELBOWS =25$=25*6=150$

The total cost =93850$

The total cost by SDG =93850*7=656950 SDG

4.5.3Output power from the one gas turbine

The power output from the gas turbine in one hour =30MW.hr from the capacity “design36MW”of machine.

The price of sales of unit of one watt product to the transportation management =0.1SDG/kW hr

Shut down of the gas turbine one hour loss money

Total money loss for one hour shut down=30000×0.1=3000SDG

Total money loss for one day shut down=24×3000=72000SDG

Total money loss for nine day and three hour shut down=72000×9+3×3000=657000SDG

5.1 Result

The data for the heat exchanger calculation

5.1.1 Shell and tube heat exchanger oil cooler

Table 5.1 shell and tube heat exchanger oil cooler properties

Part heat exchanger	**Shell side**	**Tube side**
Property	**Oil lubricant**	**Demine Water**
Temperature in	70°C	33°C
Temperature out	49°C	43°C
Mass flow	25kg/sec	24.11kg/sec
Heat Load	1008kw	1008kw
Number of pass	One	One

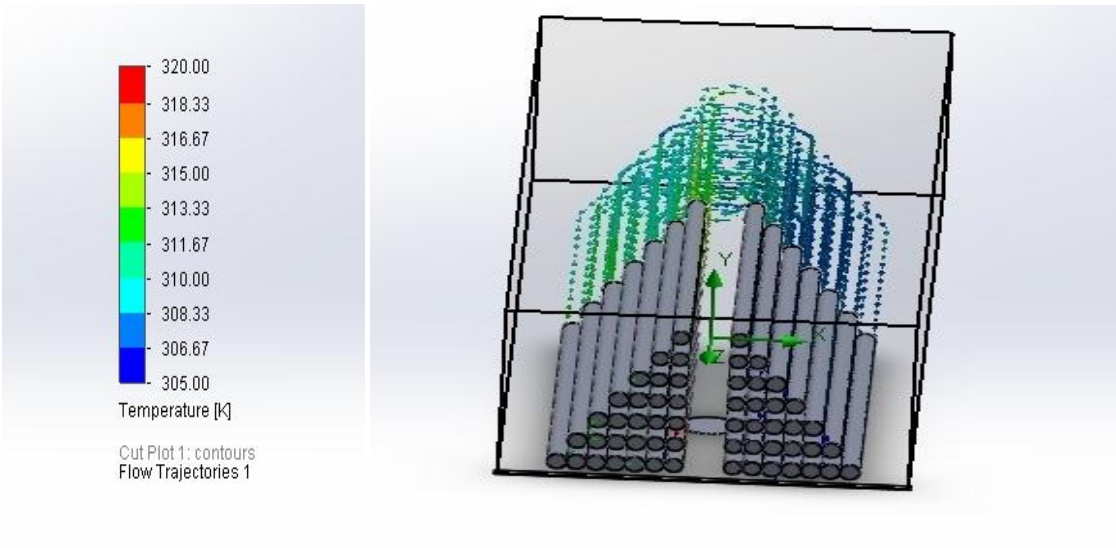

Fig 5.1 water analysis inside the tube

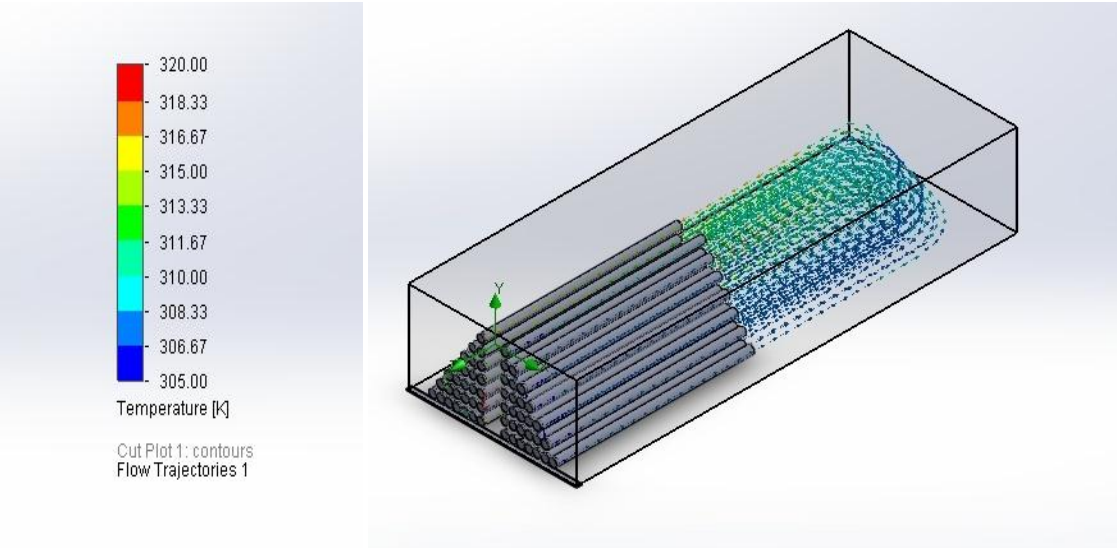

Fig 5.2 water analysis inside the tube

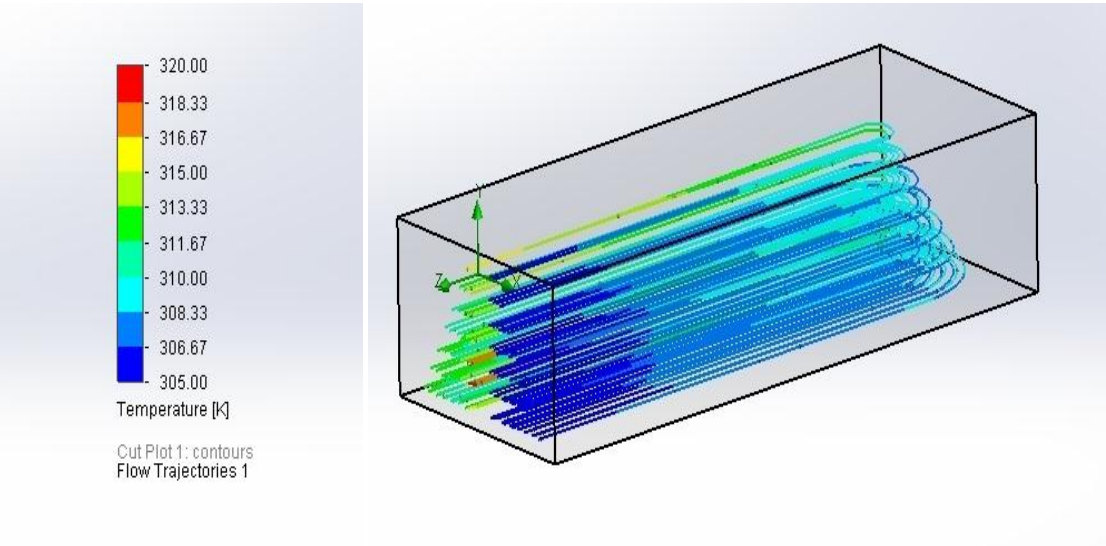

Fig 5.3 water analysis inside the tube

- From the previous figures show a heat transfer within the heat exchanger of the treatment of cooling water, where we note the calibrator heat scheme that water enters at a temperature of 305k to 306k and then increases after that of 306k to 310k as explained in Figure III, and then increase from 310k to 315k and a little more than 316k.
- It notes that the distribution scheme of heat transfer is good.

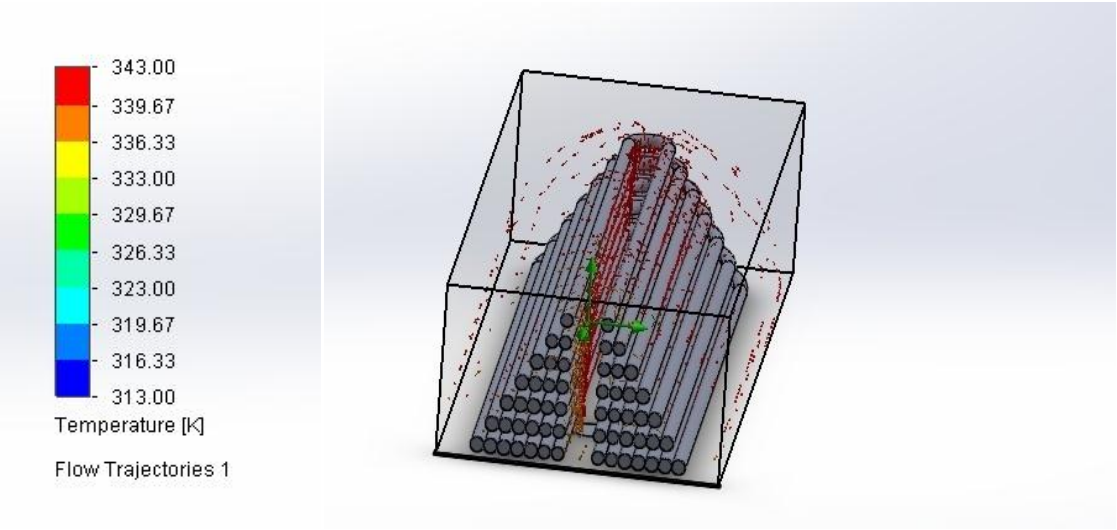

Fig 5.4 Oil analysis in shell cooler

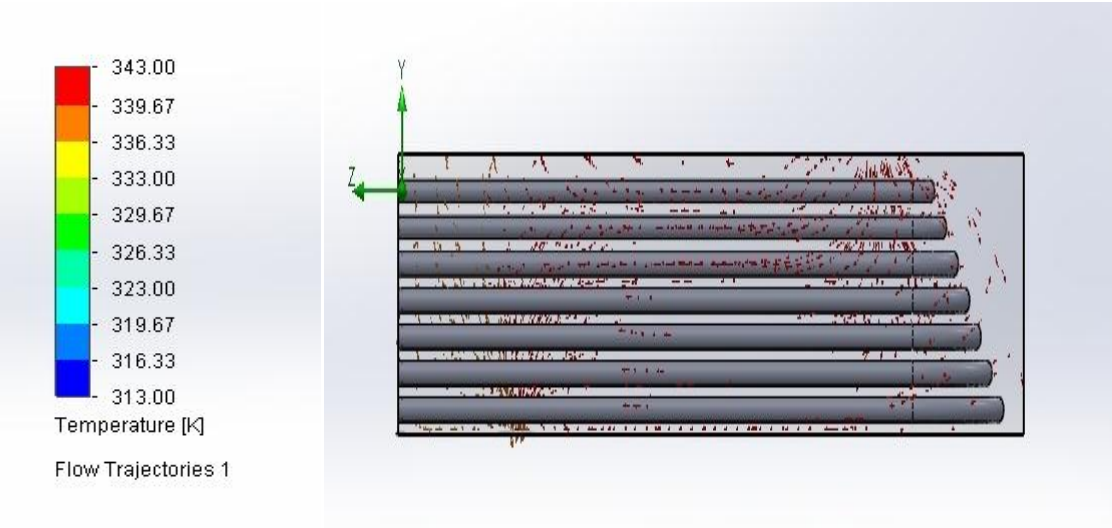

Fig 5.5 Oil analysis in shell cooler

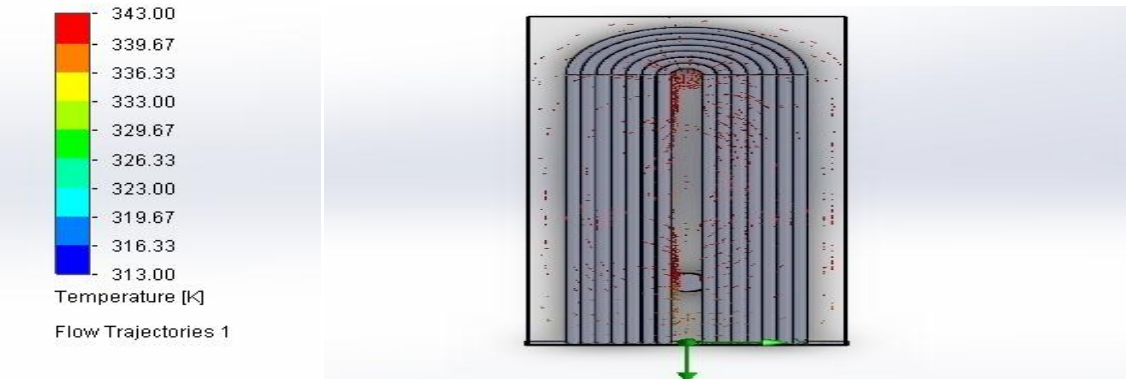

Fig 5.6 Oil analysis in shell cooler

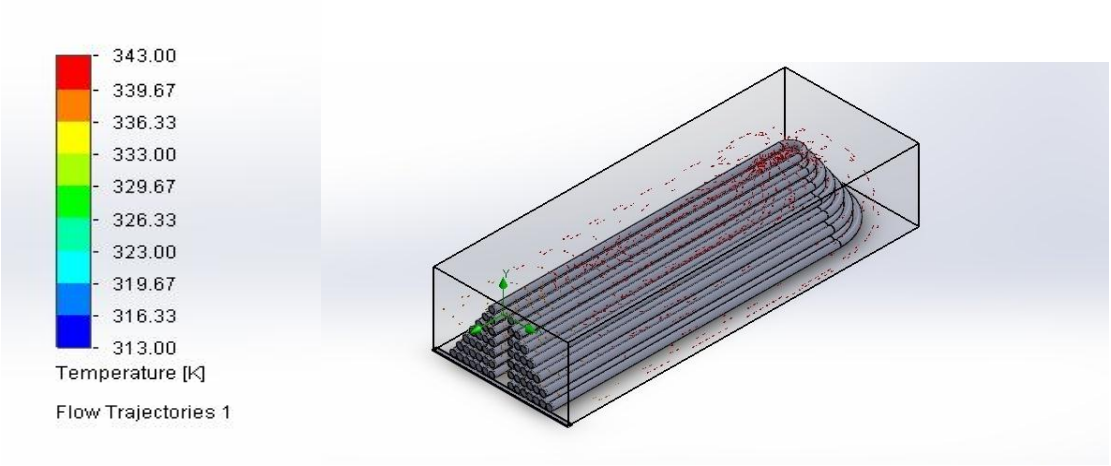

Fig 5.7 Oil analysis in shell cooler

- Note from the past forms of heat transfer in the heat exchanger shell and tube heat .exchanger
- And note that the staging of the thermal heat transfer of lubricating oil into the cooling water, where lubrication oil comes out degree heat required a 343k.
- This means that the heat transfer from the oil to the cooling water that is required of the heat exchanger.

5.1.2 Plate heat exchanger

Table 5.2 Plate heat exchanger properties calculation

Part heat exchanger	**Raw water**	**Demine Water**
Property		
Temperature in	31 °C	43 °C
Temperature out	32.5 °C	33 °C
Mass flow	180 kg/sec	24.11kg/s
Heat Load	1008kw	1008kw
Pressure Drop	70.3 pa	1.24pa
Velocity	0.188 m/s	0.025 m/s
Width of plate	0.4 m	
High of plate	1.0 m	
Distance between two plates	0.007 m	
Thickness of plate	0.005 m	
Over all heat transfer	30.18 kW/m^2 k	
Material plat	Aluminum	
Total area	6.89 m^2	
Number of plate	18	

Table 5.3 Plate heat exchanger properties selection

Model, frame	**TS20MFM**
Height, H, (mm)	1405
Width, W, (mm)	740
Vertical connection dist., VC, (mm)	698
Horizontal connection dist., HC, (mm)	363
Connection size, pipe (inch)	-
Connection size, flange (mm)	200
Max flow rate, (kg/s)	190
Max temperature, (ºC)	180
Max pressure, (brag)	10
Flow principle	Parallel

5.2 Discussion

Through the results obtained by ANSYS Fluids program to analyze the heat exchanger shell & tube was obtained as follows:

- Going through treatment of cooling water inside the heat exchanger inside the pipe, it appears from the results that the cooling water enters the heat exchanger at 33°C and graduated at a temperature 43°C.
- Lubricating oil passes through the heat exchanger in the shell where it enters a temperature of 70°C to 49°C and come out.
- It proved choose flat heat exchanger high efficiency and that of the results obtained.

6.1 Conclusion

- The heat exchanger has been selected above based on previous accounts of the heat exchanger and TS20MFM type is chosen according to the required flow rate Max it gives, with the dimensions of space with little more than a requirement but it comes with the benefit increase in heat exchange, with the required dimensions appropriate in both M10BFM and M10BFG and qualitative but Max flow rate the designer much less than desired.
- The check was in cost because the Max flow rate output from the above accounts given of pumps of cooling water coming from cooling towers to cool the treated water, the system contains three pumps, will require a change if you change the Max flow rate.
- The production loss in the gas turbine shut down to nine days and three hour this money loss is enough to change the old lubrication system by new design system.
- Has been used to cool the lubricating oil within the heat exchanger cooling water treatment, in order to prevent marring inside the heat exchanger.
- Showed the result obtained after the analysis of the results of compliance proven mathematically.
- Closed system has proven its effectiveness in cooling.

6.2 Recommendation

- I recommend using a new cooling system and to its dependence on the use of cooling water treatment within the heat exchanger shell and tube, and then cooled by water coming from the cooling towers.
- I also recommended for use the new system in electricity villages Station 1 & 2, and so to solve the problem of cooling.
- I also recommend using the two plate heat exchanger so as to have one of them works and the second to wait for the work if the exchanger the first stop, so as not to stop the machine.

References

1-A.K.Raja, Amit Prakash Srivastava, Manish Dwivedi, 2006. Power Plant Engineering. 1st ed. Indian: New Age International (P) Limited, Publishers 4835/24, Ansari Road, Daryaganj, New Delhi - 110002.

2-Tony Giampaolo, 2005. GasTurbineHandbook: PrinciplesandPractices.3rd ed. Indian: The Fairmont Press, Inc.

3-Meherwan p.boyce, 2002. Gas Turbine Engineering Handbook. 2nd ed. United States of America: manager of special sales Butter worth Heinemann.

4-Hydroelectric Research and Technical Services Group, 2004. Lubrication of Power plant Equipment. Facilities, Instructions, Standards, and Techniques, 2-4, 1-27.

5- Rajeev Rajora, Harsh Kumar Dixit, 2013.Effectof Lube Oil Temperature on Turbine Shaft Vibration. International Journal of Mechanical Engineering and Robotics Research, 2-2, 324-334.

6-Karthigeyen.S,Karthigeyen.S,Manigandan.M,Prabhu Rajasekar K.K,Ralph Stephenson .S, 2015. Turbine Lube Oil System Monitoring and Control using PIC Controller. International Journal of Latest Trends in Engineering and Technology, 5-2, 553-559.

7-Parichart Suttiprasit,Chaiyant Tibdee,Narit Wongsa, 2009. Remedial Action Step of SubSynchronous Vibration Trip on Steam Turbin e: A case Study of EGAT South Bangkok Power Plant. Life assessments, f ailure analysis and chemistry , 2-9, 1-8.

8-Omid A. Zargar, 2014. Vibration, Lubrication and Machinery Consideration for a Mixer Gearbox Related to Iran Oil Industries. International Journal of Mechanical, Aerospace, Industrial, Mechatronic and Manufacturing Engineering, 8-3, 547-553.

9-Neeraj Gochar, Dharmendra Kumar Jain, 2013. Vibration Analysis of Turbo Generator in Kota Super Thermal Power Station. International Journal of Science and Research (IJSR), 4-8, 1612-1615.

10-R. Taherzadeh Mousavian , E. Hajjari, D. Ghasemi , M. Kojouri Manesh , K. Ranjbar ,2011. Failure analysis of a shell and tube oil cooler. Engineering Failure Analysis,18,202-211.

11-Dina Raheem, 2011. Effect of Mixed Corrosion Inhibitors in Cooling Water System. Al-Khwarizmi Engineering Journal, 7-4, 76-87.

12- TambeShahanwaj K, PandhareNitin T, BardeskarSantosh J, Khandekar S.B, 2015. Experimental Investigation of Performanceof Plate Heat Exchanger for Wateras WorkingFluid. International Journal of Research in Engineering and Technology, 4-3, 372-380.

13- Vishal R. Naik, V.K. Matawala, 2013. Experimental Investigation of single phase Chevron Type Gasket Plate Heat Exchanger. International Journal of Engineering and Advanced Technology, 2-4, 362-369.

14- Mohd.SohailAnsari, KunalGaikwad, Prashant Mishra, 2014. Heat Transfer Analysis of Corrugated Plate Heat Exchanger over Coil Type Heat Exchanger: A Review. International Journal of Engineering Research & Technology, 3-3, 446-449.