Alfa Laval in brief

Alfa Laval is a leading global provider of specialized products and engineering solutions.

Our equipment, systems and services are dedicated to assisting customers in optimizing the performance of their processes. Time and time again.

We help our customers to heat, cool, separate and transport products such as oil, water, chemicals, beverages, foodstuff, starch and pharmaceuticals.

Our worldwide organization works closely with customers in almost 100 countries to help them stay ahead.

How to contact Alfa Laval

Contact details for all countries are continually updated on our website. Please visit www.alfalaval.com to access the information.

PC 68248 E 0204

Alfa Laval plate heat exchangers

A product catalogue for comfort heating and cooling

Inside view

4 The Alfa Laval Gasketed Plate Heat Exchanger

6 Heating applications

7 Cooling applications

8 PHE data – tables

10 Accessories

11 Instructions

12 Using webcALc™

14 Radiator heating – tables

15 Tap water heating – tables

The Alfa Laval gasketed heat exchanger

The gasketed plate heat exchanger (PHE) range from Alfa Laval is the result of years of experience in heat transfer technology. At a quick glance the design may seem traditional, but when studying the plates, gaskets and frames in detail the superiority of the Alfa Laval PHE becomes obvious. As always, attention to detail is what gives Alfa Laval the winning edge.

- Flexible design
- Efficient heat transfer
- Compact design

- Single-step pressing of all plates
- Clip-on or glued gaskets
- Quickly and easily opened frames

High performance heat transfer
In Alfa Laval's plate heat exchangers (PHEs), the two media are separated by a thin, corrugated plate. The rule is the thinner the plate, the more efficient and more uniform heat transfer, the better the process control. But it is equally important to achieve a turbulent flow and a uniform distribution across the entire surface of the plate. Alfa Laval has solved the distribution problem with a unique, efficient, distribution pattern. Turbulent flow is achieved by the plates' herringbone pattern.

Alfa Laval plates are available in a wide range of designs and sizes.The pattern, pressing depth and material can be altered to accommodate different applications. The standard plate is pressed in stainless steel, but can be manufactured in other pressable materials as well, e.g. titanium. The modular design means that the PHE can easily be customized for different applications.

All Alfa Laval plates are produced in a single-step pressing process. This guarantees that all plates will be identical, featuring uniform corrugation forms and contact points. When Alfa Laval plates are assembled in a finished PHE, they utilize the plates' contact points to create a flexible yet mechanically stabile construction that can withstand great strain.

Quality sealing systems
For Alfa Laval's PHE range there are gaskets available in many different materials and designs. The most common gasket materials used in HVAC applications are nitrile (NBR) and EPDM. Alfa Laval's gaskets are always moulded in one piece. This guarantees exact gasket geometry and no weak links from vulcanisation. Also, the gasket groove on the plate and the gasket itself is designed together to ensure optimum sealing capabilities.

Alfa Laval offers three different gasket fastening solutions, all of which guarantee a perfect result: the revolutionary, quickly inserted Clip-on gasket; the Tape-on gasket for plates with small pressing depths, and glued gaskets with Alfa Laval's specially developed gluing technique for unsurpassable adhesion.

Solid pressure vessel design
The frame is an important component in Alfa Laval's plate heat exchanger (PHE) concept. Thanks to the precision-made and user-friendly frame, the gasketed PHEs can be quickly and easily opened for inspection and gasket replacement. And they are just as easily reassembled with a perfect fit. Time after time. Another advantage of the Alfa Laval frames is that they can easily be adapted for expansion or reconstruction of a PHE. Alfa Laval frames come in many different models, and they can also be customized for different applications.

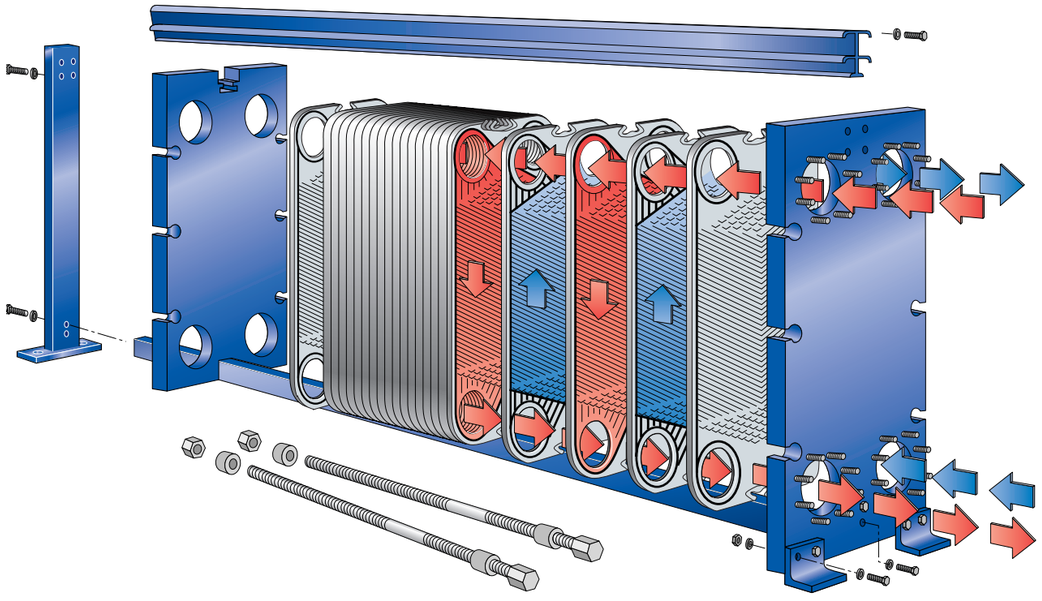

Plate heat exchangers in heating systems
Plate heat exchangers are commonly used in all types of heating applications with demands on comfort, reliability and safety. In addition to transferring heat from one circuit to another, the heat exchanger also efficiently handles the pressure differences that normally exist between the primary and secondary sides. The Alfa Laval range of gasketed plate heat exchanger models covers all comfort heating duties like tap water heating and swimming pool heating, from small to large capacities. Thanks to a flexible design, the PHE can be tailor-made to fit your specific needs exactly.

Tap water heating
The advantages of using a plate heat exchanger to produce hot tap water compared to traditional coil in tank systems are numerous. The PHE instantly heats the tap water to the required temperature when it passes through the heat exchanger. This means that hot water is available immediately and at any time. Another benefit with using plate heat exchangers for hot tap water production is that the system requires much less space than a traditional tank and coil system. If solar energy is used to produce hot tap water, a PHE makes it possible to separate the treated water in the solar panels from the tap water circuit. Also, scaling problems and corrosion risks in the solar panels are reduced when separating the circuits with a PHE.

Swimming pool heating
During the summer season when the building's heating system is not used to full capacity, excess heat from the existing heat source can be used for heating outdoor pools. A heat exchanger installed between the swimming pool's circulation system and the building's ordinary heating system separates the circuits and provides pool heating. It's important to remember that addition of chlorine should take place after the water has passed the heat exchanger in order to avoid a high concentration of chlorine flowing through the heat exchanger. It is recommended to use titanium plates when the chloride concentration is high.

Plate heat exchangers in cooling systems
The requirement for thermal efficiency - close temperatures - is very high particularly in cooling applications lig e.g. thermal storage and free cooling. Thanks to Alfa Laval's superior competence in plate pressing, temperature approaches of down to 0.5°C (0.9°F) between the two circuits can be achieved. In addition, this can be accomplished in a single pass connection with all four connections on the front plate, making installation and maintenance very easy.

Central cooling
The main component of the central comfort cooling system is the cold source, commonly a chiller. While cold water or glycol solution is produced on the evaporator side, heat is generated and rejected on the condenser side of the chiller. There are several benefits using a plate heat exchanger in either the hot condenser circuit or the cold evaporator circuit.

The condenser can for example be cooled by an open cooling source like sea or river water. However, the often aggressive media in the open circuits can affect sensitive A/C equipment such as the chiller. A plate heat exchanger, installed as a divider between the two systems, eliminates these problems. On the cold evaporator side the plate heat exchanger is used to separate two clean cold circuits, and to protect other equipment from high pressures.

District cooling
District cooling is environment-friendly with better utilisation of cooling capacities and an environment-friendly cooling source. It gives the user convenience and comfort and a better level of equipment redundancy, less need for maintenance and space savings. It also gives the user economical benefits with lower investment costs and flexibility of operation. Using plate heat exchangers in indirect district cooling distribution creates a number of advantages, for example pressure interception between the different circuits. The wide range of Alfa Laval PHE models with different characteristics assures that optimum solutions can be found for virtually all comfort cooling duties.

Model, frame	M3FM	M3FG	M3FGL	M6FM, FML	M6FG, FGL	M6FD	M6MFM, FML	M6MFG, FGL	M6MFD	TS6MFM	TS6MFG	TS6MFD	M10BFM	M10BFG	M10BFD	M10MFM	M10MFG	M10MFD	M15BFML	M15BFM8	M15BFG8	M15BFD8
Height, H, (mm)	480	480	480	920	920	940	920	920	940	704	704	704	1084	1084	981	1084	1084	981	1815	1885	1885	1980
Width, W, (mm)	180	180	180	320	320	330	320	320	330	400	400	410	470	470	470	470	470	470	650	610	650	650
Vertical connection dist., VC, (mm)	357	357	357	640	640	640	640	640	640	380	380	380	719	719	719	719	719	719	1294	1294	1294	1294
Horizontal connection dist., HC, (mm)	60	60	60	140	140	140	140	140	140	203	203	203	225	225	231	225	225	231	298	298	298	304
Connection size, pipe (inch)	1¼”	1¼”	1¼”	2”	2”	-	2”	2”	-	-	-	-	-	-	-	-	-	-	-	-	-	-
Connection size, flange (mm)	-	-	-	60	60	60	60	60	60	70	70	70	100	100	100	100	100	100	140	140	140	140
Max flow rate, (kg/s)	3.9	3.9	3.9	15	15	15	15	15	15	20	20	20	50	50	50	50	50	50	80	80	80	80
Max temperature, (ºC)	140	140	140	160	160	160	160	160	160	180	180	180	160	160	160	160	160	160	160	160	160	160
Max pressure, (barg)	10	10	10	10	16	25	10	16	25	10	16	25	10	16	25	10	16	25	10	10	16	30
Flow principle	Parallel	Parallel	Parallel	Parallel	Parallel	Parallel	Parallel	Parallel	Parallel	Parallel	Parallel	Parallel	Parallel	Parallel	Parallel	Parallel	Parallel	Parallel	Parallel	Parallel	Parallel	Parallel

Model, frame	M15MFM8	M15MFG8	M15MFD8	M15EFG8	M15EFD8	TS20MFM	TS20MFG	TS20MFS	M20MFM	M20MFG	M20MFD	MX20BFMS	MX20BFGS	MX20BFDS	MX25BFM	MX25BFG	MX25BFD	M30FM	M30FG	M30FD
Height, H, (mm)	1885	1885	1980	1885	1980	1405	1405	1435	2100	2200	2200	2595	2595	2595	2895	2895	2895	2882	2882	2920
Width, W, (mm)	610	650	650	650	650	740	800	800	780	780	780	920	920	940	920	920	940	1150	1170	1190
Vertical connection dist., VC, (mm)	1294	1294	1294	1294	1294	698	698	698	1478	1478	1478	1939	1939	1939	1939	1939	1939	1842	1842	1842
Horizontal connection dist., HC, (mm)	298	298	304	298	304	363	363	363	353	365	353	439	439	439	439	439	439	596	596	596
Connection size, pipe (inch)	-	-	-	-	-	-	-	-	-	-	-	-	-	-	-	-	-	-	-	-
Connection size, flange (mm)	140	140	140	140	140	200	200	200	210	210	210	200/250	200	200	200/250	200/250	200/250	300	300	300
Max flow rate, (kg/s)	80	80	80	65	65	190	190	190	180	180	180	250	190	190	250	250	250	450	450	450
Max temperature, (ºC)	160	160	160	60	60	180	180	180	160	160	160	160	160	160	160	160	160	140	140	140
Max pressure, (barg)	10	16	30	16	30	10	16	30	30	30	30	10	16	25	10	16	25	10	16	25
Flow principle	Parallel	Parallel	Parallel	Parallel	Parallel	Parallel	Parallel	Parallel	Parallel	Parallel	Parallel	Parallel	Parallel	Parallel	Parallel	Parallel	Parallel	Parallel	Parallel	Parallel

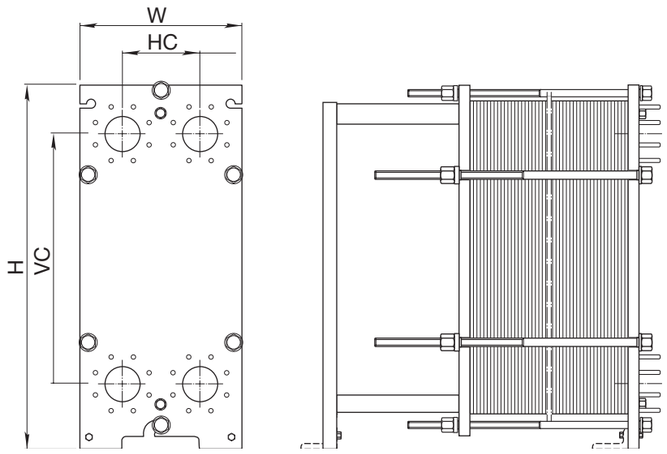

Plate, gasket and connection materials
Plates can be obtained in all pressable materials. The most common materials are: stainless steel AISI 304, AISI 316, and titanium. Gaskets are available in a wide range of elastomers. The most common are: nitrile and EPDM. Threaded pipe connections are available in stainless steel and titanium, and for M6 also in carbon steel. Flange connections are available unlined or with linings in rubber, stainless steel, titanium or other alloys depending on model.

Max pressure and temperature
All models are available with different frame designs and different plate thickness depending on the required design pressure. The maximum temperature depends on the gasket material used, and the working pressure.

Approvals
All models are approved according to all major pressure vessel codes, including marine classifications.

Insulation
Insulation, designed for HVAC applications, is available for most PHE models. There are two different types of insulation – heating and cooling insulation.

The reason for having two different types is that the mineral wool will be wet from condensing water if used when the heat exchanger temperature is lower than the surrounding temperature. Polyurethane is more expensive than mineral wool, but technically the cooling insulation can be used for heating duties as well.

Heating insulation

Heating insulation
Heating insulation consists of 65 mm of mineral wool, cladded with a 1 mm aluminium sheet on the outside and aluminium foil on the inside. It covers all sides of the PHE including the frame- and pressure plate, except downwards. The different parts are held together with snap catches.

Cooling insulation
Cooling insulation consists of 60 mm of polyurethane, cladded with a 1 mm aluminium sheet on the outside and aluminium foil on the inside. It covers all sides of the PHE including the frame- and pressure plate, except downwards, where there is a galvanized drip tray. The different parts are held together with snap catches.

Cooling insulation

Drip tray
The Alfa Laval drip tray insulates the heat exchanger from the floor, and it also collects any condensate formed on the outside of the heat exchanger. The drip tray also collects any remaining water (after drainage) in the PHE when the unit is opened for inspection or maintenance. The drip tray consists of 0.75 mm hot galvanized steel plates, 50 mm polyurethane foam, supports of waterproof wood, and a draining valve.

Drip tray

Protection sheet
A protection sheet is a device covering all sides of the plate pack except downwards. It is used to prevent persons from getting injured if a sudden leak of hot, corrosive or toxic media should occur. The Alfa Laval protection sheet consists of one or more stainless steel (AISI 304) sheet(s) formed to fit the PHE. On most frames the sheet is fitted between the plate pack and the tightening bolts.

Protection sheet

Start up procedure

1. Before starting any pump, check whether instructions exist stating which pump should be started first.
2. Check that the valve between the pump and the heat exchanger is closed.
3. Check that the valve at the exit, if there is one, is fully open.
4. Open the ventilation.
5. Start the pump.
6. Open the valve slowly.
7. When all the air is out, close the ventilation.
8. Repeat the procedure for the other side.

Shut down procedure

1. First establish whether instructions exist as to which side should be stopped first.
2. Slowly close the valve controlling the flow rate of the pump you are about to stop.
3. When the valve is closed, stop the pump.
4. Repeat the procedure for the other side.
5. If the heat exchanger for any reason is shut down for a longer period, more than a few days, it should be drained.

Installation instructions
In HVAC applications, it is recommended, from a performance point of view, to install the heat exchanger so that a counter current flow is obtained. Alfa Laval recommends installing the PHE on a flat foundation giving the necessary support to the frame. It is important to leave free space around the PHE, to be able to carry out maintenance work if needed. Make sure that all foreign objects have been rinsed out of the system before connecting any piping to the heat exchanger. Also, no stress or strain is to be placed on the PHE by the piping system.

Operation
Adjustments in flow rates to maintain correct temperatures or pressure drops should be made slowly in order to prevent pressure shocks to the system. Any problems in maintaining the performance of the heat exchanger may be caused by changing temperature conditions, changing flow rates or by fouling. As long as the PHE is operating satisfactorily, it should be left without any interference. After start-up, the PHE does not require continuous supervision.

Maintenance instructions
The heat transfer through the plates can be seriously reduced by the formation of deposits of various kinds on the plate surfaces. Even if the highly turbulent flow gives a strong resistance to the formation of deposits the turbulence can not completely eliminate fouling. Normal maintenance does not usually require the PHE to be opened (apart from occasional check of plates and gaskets). Thanks to CIP (Cleaning In Place) it is possible to remove calcium deposits and other forms of scaling from the plate surfaces in an easy and effective way without opening the heat exchanger. Different cleaning solutions can be used depending on the type of deposits. Alfa Laval has a worldwide service organisation. Service is available in 130 countries at 15 major service centres and a network of service stations around the globe.

Using webcALc™

webcALc™ is an easy to use selection tool available on-line that can be used for sizing heat exchangers for applications like tap water heating, district heating, cooling, and district cooling.

- Available on www.alfalaval.com
- Easy to use
- Detailed results

How to calculate and select a heat exchanger with webcALc™
For duties that are not covered in the selection tables, and if you want to get a more tailor-made design, you can design your heat exchanger on-line on the internet site www.alfalaval.com using a selection tool called webcALc™. It should be noted that webcALc™ is a simplified version of the software used by Alfa Laval, and therefore the result may differ slightly when comparing with the selection tables and/or quotations made by Alfa Laval representatives. webcALc™ is quite easy to use, but if you need instructions just follow the step by step instructions below. You enter the data for your fluids into the different input fields in webcALc™. Move between the different input fields by using either the mouse or the tabulator.

Step by step guide

1. Start by selecting the hotter fluid, fluid 1, by clicking on the arrow in the pull down menu. Available fluids are: water (default value), seawater (containing approximately 3% NaCl), ethylene glycol and propylene glycol. When selecting glycol fill in the concentration, %, in the input field.
2. Enter the maximum allowed pressure drop over the heat exchanger in the next input field. (Default 100 kPa)
3. Enter the available flow rate of fluid 1. Omit this value if the heat load is specified either at the bottom of the page or if the heat load is specified through the full input on the cold side. There must always be heat balance in the heat exchanger, which means that the heat load on the hot side is always equal to the heat load on the cold side.
4. Enter the inlet temperature of fluid 1 in the input field temperature in, and if applicable the required outlet temperature in the input field temperature out.
5. Enter the data for the colder fluid, fluid 2, in the same way as for fluid 1 (point 1 to 4).
6. At the bottom of the page you select which material that should be used for the heat transfer plates. You can choose between stainless steel AISI 316 (default), stainless steel AISI 304 and titanium.
7. Heat load is an optional field to be used if the in- and outlet temperatures as well as flow rate have not been specified on either the cold or the hot side.
8. The field units makes it possible to change between SI, American or metric units.

How to use webcALc™'s control panel
Design pressure: select the required pressure resistance for the heat exchanger. (Default 10 bar)

Display: webcALc™ selects from the complete range of gasketed and brazed heat exchangers included in the software (default). You can specify if you only want a choice of either PHEs or BHEs or standard sizes of BHEs.

Max no. of exchangers: webcALc™ will select one or more identical units (maximum 9 units) depending on the requirement of the thermal duty (default). If you want webcALc™ to suggest only solutions with a certain number of identical units, then select from one to nine units.

After you have entered the data
When you have entered your data, press the heat balance button and webcALc™ will present the temperatures graphically. Via the heat balance, webcALc™ will calculate the missing parameters (heat load, flows or temperatures). Heat balance will also indicate if any input parameters for a successful thermal calculation are missing. Please note that if both heat load and flows have been specified, webcALc™ will give higher priority to the heat load.

Press calculate to perform the thermal calculation. webcALc™ will present up to nine alternative heat exchanger solutions. It is possible to use the calculate button without previous usage of heat balance. Press reset to empty your input before entering new data for a new thermal calculation. The input fields will be reset to webcALc™'s default values.

How to use and interpret webcALc™'s results
The heat exchanger solutions can be sorted by four different criteria: price (default sorting is based on an approximate price comparison between the different solutions), height, weight, and extension capacity. Brazed heat exchangers do not offer any extension possibility. Please note that the specified weights may be slightly lower due to different pressure vessel codes and local standards. Select your solution by clicking on the unit type in the table.

The output of webcALc™
Each solution is presented with a standardised drawing and the specific technical parameters. Each solution also has a corresponding AutoCAD drawing, which can be downloaded to your computer. To print the technical parameters, use the printer-friendly page offered at the bottom of the result page. It is also possible to download specification texts for different types of heat exchangers.

webcALc™ selects from the complete range of gasketed and brazed heat exchangers included in the software (default).

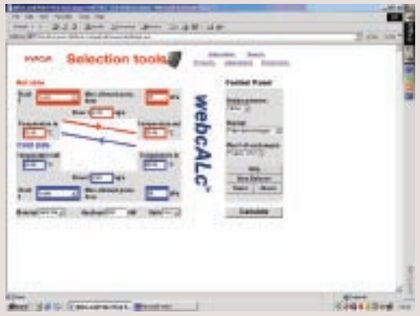

Press calculate to perform the thermal calculation. webcALc™ will present up to nine alternative heat exchanger solutions.

Each solution is presented with a standardised drawing and the specific technical parameters.

Prim.in→out/out←Sec.in Max pressure drop prim/sec	160→80/90←70 50/20 kPa	135→70/70←55 20/20 kPa	35→80/95←70 10/20 kPa	135→80/95←70 20/30 kPa	135→80/90←70 10/20 kPa	135→80/90←70 20/30 kPa	130→80/95←70 10/20 kPa
Capacity, kW	Model	Model	Model	Model	Model	Model	Model
50	M3-18H	M3-14M	M3-18H	M3-18H	M3-18H	M3-14H	M3-20H
100	M3-34H	M3-30M	M3-30H	M3-30H	M3-34H	M3-24H	M3-34H
150	M6M-12M	M6M-12L	M3-42H	M3-42H	M3-54H	M3-42H	M3-48H
200	M6M-16M	M6M-16L	M3-58H	M3-56H	M6M-16M	M3-60H	M3-62H
300	M6M-24M	M6M-22L	M6M-24M	M6M-24M	M6M-24M	M6M-20M	M6M-28M
400	M6M-34M	M6M-32L	M6M-32M	M6M-32M	M6M-34M	M6M-26M	M6M-34M
500	M6M-44M	M10M-22M	M6M-38M	M6M-38M	M6M-44M	M6M-34M	M6M-42M
750	M10M-40M	M10M-34M	M10M-34H	M6M-54M	M10M-42H	M10M-34H	M10M-36H
1,000	M10M-52M	M10M-46M	M10M-46H	M10M-42H	M10M-58H	M10M-46H	M10M-48H

Prim.in→out/out←Sec.in Max pressure drop prim/sec	130→80/95←70 20/30 kPa	130→80/9←70 10/20 kPa	30→80/90←70 20/30 kPa	135→75/95←70 50/20 kPa	135→75/90←70 50/20 kPa	130→70/85←65 50/20 kPa	10→70/80←65 30/30 kPa
Capacity, kW	Model	Model	Model	Model	Model	Model	Model
50	M3-20H	M3-18H	M3-16H	M3-32H	M3-24H	M3-26H	M3-28H
100	M3-34H	M3-34H	M3-28H	M3-60H	M3-44H	M3-46H	M3-52H
150	M3-48H	M3-54H	M3-42H	M6M-18H	M3-64H	M3-66H	M6M-24M
200	M3-62H	M6M-16M	M3-60H	M6M-22H	M6M-26M	M6M-28M	M6M-30M
300	M6M-28M	M6M-24M	M6M-20M	M6M-34H	M6M-38M	M6M-40M	M6M-42M
400	M6M-34M	M6M-34M	M6M-26M	M6M-46H	M6M-48M	M6M-50M	M10B-26H
500	M6M-42M	M6M-44M	M6M-34M	M6M-58H	M10M-34H	M10M-36H	M10B-32H
750	M10M-36H	M10M-42H	M10M-34H	M10M-68H	M10M-50H	M10M-52H	M10B-50H
1,000	M10M-48H	M10M-58H	M10M-46H	M10M-88H	M10M-64H	M10M-68H	M10B-66H

Prim.in→out/out←Sec.in Max pressure drop prim/sec	110→60/80←55 30/30 kPa	110→60/70←50 30/30 kPa	105→70/85←65 50/30 kPa	95→45/75←40 20/20 kPa	75→40/70←35 10/20 kPa	65→40/60←35 10/30 kPa	60→50/45←35 20/20 kPa
Capacity, kW	Model	Model	Model	Model	Model	Model	Model
50	M3-48H	M3-18H	M3-52H	M6-12H	M6-46H	M6-30H	M3-24H
100	M3-90H	M3-30H	M6M-16H	M6-20H	M6-84H	M6-54H	M6M-14L
150	M6M-20M	M3-44H	M6M-22H	M6-28H	M6-124H	M6-80H	M6M-18L
200	M6M-26M	M3-62H	M6M-28H	M6-34H	M6-162H	M6-104H	M6M-24L
300	M6M-36M	M6M-24M	M6M-40H	M6-50H	M10B-294H	M6-152H	M10M-22M
400	M6M-46H	M6M-32H	M6M-50H	M6-64H	M10B-390H	M10B-208H	M10M-28M
500	M6M-56H	M6M-38H	M10B-64H	M6-78H	-	M10B-258H	M10M-36M
750	M6M-82H	M10M-36H	M10B-86H	M6-114H	-	M10B-382H	M10M-54M
1,000	M10B-68H	M10M-48H	M10B-134H	M10B-132H	-	-	-

Heat exchanger selection tables

The selection tables in this catalogue enable you to find a suitable heat exchanger model and size in a quick and easy way for a number of pre-defined duties. The duties are based on radiator and tap water heating duties which are common in some European countries where district heating is used. It is of course impossible to cover all temperatures and capacities in tables like these, but hopefully they can provide you with some guidance when selecting a heat exchanger for your duty. For a more tailor-made design, you can also use the on-line selection tool called webcALc, which is presented in detail in this catalogue. Of course, you are also most welcome to contact any Alfa Laval representative who will be happy to assist you with a heat exchanger selection.

Disclaimer

While every precaution has been taken, Alfa Laval assumes no responsibility for errors or omissions, or for damages resulting from the use of the information contained herein. We reserve the right to change our products and the specifications detailed in this brochure without prior notice.

Prim.in→out/out←Sec.in Max pressure drop prim/sec	90→70/60←10 20/20 kPa	90→70/55←10 20/30 kPa	90→70/55←10 30/30 kPa	90→70/50←10 30/30 kPa	90→60/60←30 30/30 kPa	80→60/55←10 30/30 kPa	80→50/60←10 20/20 kPa
Capacity, kW	Model	Model	Model	Model	Model	Model	Model
50	M3-14M	M3-14M	M3-12M	M3-12M	M3-12H	M3-14M	M3-14M
100	M3-24M	M3-24M	M3-20M	M3-20M	M3-20H	M3-24M	M3-24M
150	M3-36M	M3-36M	M3-28M	M3-28M	M3-30H	M3-32M	M3-36M
200	M6M-14L	M6M-14L	M3-40M	M3-40M	M3-40H	M3-42M	M3-50M
300	M6M-18L	M6M-18L	M6M-16L	M6M-16L	M3-62H	M6M-20L	M6M-20M
400	M6M-24L	M6M-24L	M6M-20L	M6M-20L	M6M-20M	M6M-23L	M6M-26M
500	M6M-30L	M6M-30L	M6M-24L	M6M-24L	M6M-24M	M6M-30L	M6M-30M
750	M10M-26M	M10M-22L	M10M-22M	M10M-18L	M6M-36M	M10M-24M	M6M-46M
1,000	M10M-36M	M10M-28L	M10M-30M	M10M-24L	M6M-50M	M10M-30M	M10M-40H

Prim.in→out/out←Sec.in Max pressure drop prim/sec	70→50/60←10 20/20 kPa	70→50/55←10 20/30 kPa	70→40/55←5 30/30 kPa	70→35/55←10 20/20 kPa	70→35/55←10 30/30 kPa	70→35/55←5 20/20 kPa	70→35/55←5 30/30 kPa
Capacity, kW	Model	Model	Model	Model	Model	Model	Model
50	M3-22H	M3-20H	M3-22H	M3-34H	M3-34H	M3-30H	M3-30H
100	M3-38H	M3-36H	M3-40H	M3-62H	M3-62H	M3-54H	M3-54H
150	M3-56H	M3-56H	M3-58H	M3-90H	M3-90H	M3-78H	M3-74H
200	M6M-22M	M6M-18M	M3-76H	M6M-18H	M6M-18H	M6M-18H	M6M-18H
300	M6M-30M	M6M-26M	M6-22M	M6M-26H	M6M-26H	M6M-26H	M6M-22H
400	M6M-40M	M6M-36M	M6-28M	M6M-34H	M6M-32H	M6M-34H	M6M-28H
500	M6M-48M	M6M-46M	M6-36M	M6M-42H	M6M-40H	M6M-42H	M6M-36H
750	M10M-44H	M10M-44H	M6-54M	M6M-66H	M6M-56H	M6M-66H	M6M-52H
1,000	M10M-60H	M10M-60H	M6-76M	M6M-92H	M6M-74H	M6M-92H	M6M-72H

Prim.in→out/out←Sec.in Max pressure drop prim/sec	70→30/60←5 50/50 kPa	70→25/60←10 20/20 kPa	65→20/55←10 20/25 kPa	60→30/55←25 30/30 kPa	60→25/55←5 20/20 kPa	60→25/55←5 30/30 kPa	6→20/55←10 20/25 kPa
Capacity, kW	Model	Model	Model	Model	Model	Model	Model
50	M6-10H	M6-14H	M6-18H	M6-42H	M6-14H	M6-14H	M6-32H
100	M6-14H	M6-20H	M6-32H	M6-78H	M6-24H	M6-24H	M6-58H
150	M6-16H	M6-28H	M6-44H	M6-114H	M6-34H	M6-34H	M6-84H
200	M6-20H	M6-36H	M6-56H	M6-150H	M6-42H	M6-42H	M6-110H
300	M6-28H	M6-52H	M6-82H	M10B-268H	M6-60H	M6-60H	M6-164H
400	M6-36H	M6-66H	M6-108H	M10B-354H	M6-78H	M6-78H	M10B-256H
500	M6-44H	M6-82H	M6-132H	M10B-440H	M6-96H	M6-96H	M10B-320H
750	M6-64H	M6-120H	M6-196H	-	M10B-136H	M10B-136H	-
1,000	M6-82H	M10B-148H	M10B-274H	-	M10B-178H	M10B-178H	-