CHAPTER ONE

INTRODUCTION

1.1 Background

The dc super-grid is one of the solutions used to transmit the power between countries instead of conventional ac solution. Also it allows the massive integration of renewable energy sources in the system, especially for countries, where large amounts of renewable energy are available in remote locations, often offshore or near the sea. These renewable energy sources mostly have a variable and, to a certain degree, unpredictable generation output. Balancing them is seen as one of the main issues in the integration of renewable energy sources. The second issue is to transmit the power from remote locations to load centers. The long distance transmission of energy puts extra pressure on already heavily loaded transmission system and because of the variability of the renewable energy sources, more transmission lines are needed for the same amount of energy delivered.

By connecting different energy sources such as wind, hydro and solar, the variability of the renewable energy sources can be reduced because of the limited correlation of different weather systems. It is considered to be one of the most important options to reach a cleaner energy provision. Because of the strong strive for an environmental energy supply with low CO_2 emissions and the existing limitations in transmission expansion [1].

DC systems can today be found in special applications. It is of interest to investigate where dc systems can be found and how dc is used before presenting a future dc network system. Focuses of this part are high-power dc systems, and key issues like grid design, operating voltage level, voltage control, energy storage, grounding and protection.

The telecommunication system uses a low-voltage dc power system, and it was developed when the centralized battery system was built. The nominal voltage of the system is -48 V with the anode connected to ground. The dc system is supplied from the ac mains via voltage controlled rectifiers.

High-power dc systems are also used in vehicles and ships, which have electric propulsion. The basic idea of hybrid electric vehicles (HEV) is to run the internal combustion engine with small power variation to minimize to environmental effects. Instead the power variations can be taken from the electric system. When the car accelerates, power to the wheels is supplied by the electric machines, and when the car decelerates the electric power generated is stored in batteries.

DC has been used for a long time in traction systems because dc machines are very easy to speed control by simply changing the series resistance. The traction power system is supplied from the ac systems via 6, 12 or 24-pulse rectifiers depending on the configuration

High Voltage DC (HVDC) is a technique to transmit electric power using dc voltage instead of ac voltage [1]. HVDC makes it possible to transmit power over a long distance or using underground cable. The absence of reactive power decreases the losses. Another advantage with HVDC is that two ac systems with different frequency can be connected. Rectifier/inverter stations are using thyristors or IGBTs depending on the installation.

The thyristor based rectifier/inverter operates as a Current Source Converter (CSC), which is a line-commutated converter. The CSC needs an ac voltage provided by the grid to operate.

HVDC with CSC is used in high voltage, high power transmission. The dc-link voltage is determined by the transmitted power, and the polarity of the dc-link is changing with the direction of the power. Since the CSC is line-

commutated there will be low-frequency harmonics present. These can be removed by using transformers, which will increase the pulse number from 6 up to 12 or 24. A HVDC system with CSC has an operating dc-link voltage up to 1200 kV, and special dc circuit breakers must be used.

The more expensive IGBT-based rectifier/inverter operates as a VSC, which is a self-commutated converter with controllable voltage magnitude, frequency and phase. The VSC produces only current harmonics at multiples of the switching frequency and its side band, and they are easy to filter. The consumed active and reactive power of the converter can be controlled individually at both ends of the HVDC link. A HVDC system with VSC has an operating dc-link voltage ranging from 20 to 300 kV. The IGBT-based HVDC can be used for black start operation, which is not possible for the thyristor-based HVDC [2].

1.2 Statement of Problem

AC systems are well-known technologies, offering a cheap and reliable solution for high power transmission using classic overhead lines. AC lines have proven to be effective in transmission and distribution of electrical power but this creates challenges for power system operators such as the problem with coordinated control is the presence of large frequency oscillations, which may lead to frequent tripping, fault level increase, and disturbance propagation from one network to another. Also in long-distance transmission requires special arrangements to keep the voltage at rated value, whilst reducing transmission losses. Reactive power devices are used to overcome voltage stability problems and the distance limitation of transmission lines. DC systems on the other hand experience much fewer problems with long distance power transmission, especially when cables are

used. As such, a DC overlay grid seems to be the most appropriate solution when cables are needed.

1.3 Objectives

This research investigated the connection of different ac networks in super dc network with common dc pool. The existing conventional energies is connected together via dc network using power converters. In general, the main objectives of the research are:

1- Develop dc network.
2- Implement control technique to control the power flow in the network.

1.4 Thesis lay-out

Chapter one: presents introduction, Statement of problem, Objectives and Thesis lay-out.

Chapter two: presents HVAC option, HVDC option and comparison between them. VSC versus Classical HVDC and operation of VSC-HVDC are discussed. The advantages and applications of VSC-HVDC are mentioned. Also the modeling of the VSC-HVDC and Control System Strategy are included.

Chapter three: This chapter mentioned the components of DC system and the control of power converter by using PWM, direct and vector control. More over the protection and grounding had been discussed. Communication, interaction between systems, AC/DC interface and the buildup of the grid are mention. Inner and outer controllers are also included.

Chapter four: Simulation of interconnected DC network. This chapter includes DC pool network system and the control system design. It’s also

including two scenarios, System behavior during normal/ outage schedule. Chapter five: Draws conclusions and recommendations.

CHAPTER TWO

Interconnection of regional networks

2.1Introduction

The continuous growth of electrical power demand especially in the developed countries has led to large and complex interconnected networks covering part of, or even the whole country. For economical and technical reasons regional power systems are extended to build the national grids which are also extended with the neighbouring countries to create the transnational super-grids. The largest interconnected power network in Europe is the ENTSO (European Network of Transmission System Operators for Electricity) which uses synchronous connection (HVAC transmission lines) to interconnect 34 countries in Europe [2].

In general, the potential benefits of the interconnected power system are:

- Allows optimum use of available resources.
- Reduction of generation costs by optimal unit commitment.
- Reliable and stable electric power systems.
- Reduction of the necessary reserve capacity in the system.
- Social and environmental advantages.
- Flexibility of building new power plant at favourable locations.

The construction of the backbone of the regional transmission system can be built using the high voltage ac system (HVAC) or high voltage dc system (HVDC).

2.2 HVAC Option

The HVACs are well known technologies, proven, cheap and reliable but with the increase in the power capacity and the long transmission distance between the regional networks, they are capable of carrying large quantities

of electric power over large distances when ultra high voltage (UHV, 1000 kV AC or higher) is used. AC systems using UHV voltages have been developed already in the 1970s, and are planned and installed in China. The HVAC technology faces some technical limitations which could reduce the advantages of the interconnected system. These limitations are summarized as follow:

- Reduction of economic advantages due to large transmission distances and insufficient voltage levels.
- Spinning reserve in the system to be transmitted over long distances (additional losses).
- Reactive power compensation is necessary for long distance transmission to avoid voltage problems.
- The operation of the tie-line may cause power oscillations.
- A fault in part of the network propagates and affects the whole system.
- HVAC system did not facilitate the connection of renewable resource especially for long distance transmission.
- Ground Impedance: In ac transmission, the existence of ground (zero sequence) current cannot be permitted in steady-state due to the high magnitude of ground impedance which will not only affect efficient power transfer, but also result in telephonic interference.

2.3 HVDC Option

The conventional CSC-HVDC systems are another possible solution to build the future dc regional networks. The CSC-HVDC system cannot be used to transfer the renewable energy without the aid of start-up generators or synchronous compensators devices which provide the necessary commutation voltage, and thus reactive power compensation devices are

required. Another limitation of CSC-HVDC systems is the necessity to reverse the dc voltage polarity in order to achieve power reversal. Complex power control associated with the multi-terminal operation may limit the terminal number.

A VSC-HVDC system is a suitable technology for building the future super-grid dc network. It is easier to control the power flow and build parallel multi-terminal configurations. Simple fixable control system is associated with multi-terminal operation including power management and power reversal. VSC-HVDC facilitates the connection of renewable power plants and isolated islands to the dc network.

Based on the previous discussion, the multi-terminal VSC-HVDC system can be used to create a large power pool to facilitate the power trading in real time between large regional ac networks, and the integration of renewable energy resources without compromising system reliability and security of supply. This approach, besides the power accommodation between the regional networks, may allow high penetration of renewable power into power systems without the need for energy storage systems for power levelling or other power quality issues.

If HVDC system is used for building of the transnational super-grid, the power pool is comprised of a meshed dc network that includes a group of dc links operated at different dc voltages, where the dc buses are connected to the regional networks via power converters [2]. The potential benefits of the dc supergrid are:

1- It is the ideal solution for the integration of large-scale renewable energy resources such as wind and solar power. The super-grid achieves renewable power balancing due to the variation in renewable energy resources output. The connection of widespread wind farms and solar energy projects to a

common dc network reduce the possibility of renewable power variability because of correlation of different weather conditions.

2- Facilitates power trading between the regional ac networks over long distances with optimum transmission losses. The high voltage in the dc links increases transmission system efficiency and the power accommodation power in remote locations and load centres.

3- Allows the regional ac networks sharing of back-up power. Any ac network can use the reserve generations in the other ac networks, and this reduces the risk of black-out in the regional ac systems.

4- Allows using underground/submarine cables as transmission medium where only cables can be used. Using cables cause no visual pollution and has less opposition with the licensing.

5- The inherent reactive power capabilities of the VSC converter provide the necessary reactive power compensation and limit the overload in the system.

2.4 Comparison of AC-DC transmission

AC systems are well-known technologies, offering a cheap and reliable solution for high power transmission using classic overhead lines. DC systems on the other hand experience much less problems with long distance power transmission, especially when cables are used. As such, a DC overlay grid seems to be the most appropriate solution when cables are needed. The technical reasons why UHV AC is not seen as a potential technology for the super-grid are:

- DC line losses are lower (no skin effect, no proximity effect);
- AC cable solutions for the needed high voltages are not yet available;
- AC cables experience a high charging current which limits their length. Long AC cables at very high voltages are difficult to construct and expensive.

- Offshore resources, as well as connections outside the main continent, are virtually inaccessible when using AC.
- HVDC offers an inherent active power control, making it more flexible in use and easier to limit overloads in the system. There are also non-technical reasons which are in favor of DC over AC technology. Using cables that cause no visual pollution and emit no varying electromagnetic fields, much less opposition and problems with licensing and construction are expected. Overhead lines are very difficult to construct because of non-technical issues. Furthermore, using sea cables allow a fast and relatively cheap cabling because few joints are needed.

In short, AC overhead lines might be an option, but building them is an issue because of political and environmental concerns and AC cables are not suited for long distance bulk power transfer. However, UHV AC remains a valid option to serve as a supergrid in case these disadvantages are deemed less important. In regions with relatively seen more open space to place the transmission lines and where less offshore connections are needed, it can form the most techno-economic solution [1].

Due to its fast controllability, a dc transmission has full control over transmitted power, an ability to enhance transient and dynamic stability in associated ac networks and can limit fault currents in the dc lines. Furthermore, dc transmission overcomes some of the following problems associated with ac transmission:

1. **Stability Limits**

The power transfer in an ac line is dependent on the angle difference between the voltages at the two line ends. For a given power transfer level, this angle increases with distance. The maximum power transfer is limited

by the considerations of steady state and transient stability. The power carrying capability of an ac line is inversely proportional to transmission distance whereas the power carrying ability of dc lines is unaffected by the distance of transmission.

2. **Voltage Control**

Voltage control in ac lines is complicated by line charging and voltage drops. The voltage profile in an ac line is relatively flat only for a fixed level of power transfer corresponding to its surge impedance loading (SIL). The voltage profile varies with the line loading. For constant voltage at the line ends, the midpoint voltage is reduced for line loadings higher than SIL and increased for loading less than SIL.

The maintenance of constant voltage at the two ends requires reactive power control as the line loading is increased. The reactive power requirements increase with line length.

3. **Line compensation**

Line compensation is necessary for long distance ac transmission to overcome the problems of line charging and stability limitations. The increase in power transfer and voltage control is possible through the use of shunt inductors, series capacitors, static VAR compensators (SVCs) and, lately the new generation static compensators (STAT-COMs). In the case of dc lines, such compensation is not needed [3].

2.5 Problems of DC Transmission

The application of dc transmission is limited by factors such as:

1. High cost of conversion equipment,
2. Inability to use transformers to alter voltage levels,
3. Generation of harmonics,
4. Requirement of reactive power, and

5. Complexity of controls.

Over the years, there have been significant advances in dc technology, which have tried to overcome the disadvantages listed above, except for item (2) [3].

2.6 HVDC Topologies

There are two options in HVDC. The most common and oldest technology is based on current source converter (CSC), also called line-commutated converter (LCC). It uses thyristors as switches and it has a constant DC current. VSC HVDC uses IGBTs and as such it is able to independently create an independent AC voltage waveform. Figure 2.1 shows the online schematics of the two technologies. The converters exhibit significant losses. The LCC HVDC converter has 0.7–0.8% losses at full load, while the existing VSC HVDC links have 1.7% losses per converter. The losses of the VSC converters are significantly higher because of the switching frequency (1–2 kHz) [1].

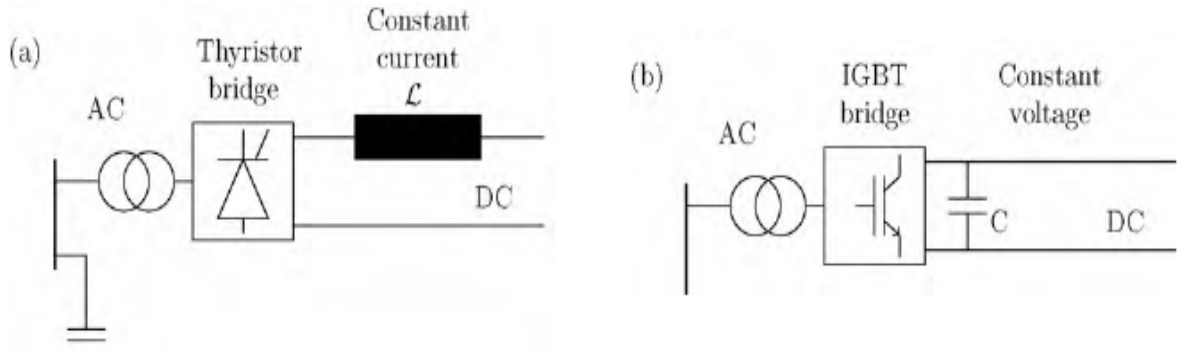

Figure 2.1 HVDC topologies

2.7 VSC versus Classical HVDC

- Active and reactive power can be controlled independently. Classical HVDC requires reactive power from the AC system so compensation is needed.
- Power reversal is accomplished without the need of DC voltage reversal. In a classical HVDC system, in order to reverse the power transmitted, the DC voltage must be reversed.
- The risk of commutation failure is reduced, since VSC uses self-commutated switches, different from the line-commutated switches used by classical HVDC, which need the presence of an AC voltage to commutate.
- Communication is not needed, since the controller of rectifiers and inverters operate independently, without the need of information of the remote ends.
- Black start capability is possible with VSC, since the AC voltage is generated from the DC side through a suitable modulation technique. Classical HVDC needs the presence of AC voltage in order to start transmitting power.
- There is no minimum DC power flow restriction, as in the case of classical HVDC, that should be above a certain level in order to commutate.
- VSC characteristics make them suitable for multi-terminal HVDC grids; independent control for each terminal can be developed.

2.8 Operation of VSC-HVDC

The operation of a VSC-HVDC can be explained by considering each terminal as a voltage source connected to an AC transmission network via

series reactors. Figure: 2.2 (a) shows a simplified single line diagram of the converter connected to an AC system. As shown in the figure, the AC system and the controlled voltage source are connected via the phase reactor. The converter is modeled as a controlled voltage source u_v at the AC side and a controlled current source i_{DC} at the DC side. The current source can be calculated based on the power balance at the AC and DC side of the converter. The controlled voltage source can be derived from the control system of the converter where the amplitude, the phase and the frequency can be controlled independently of each other.

The controlled voltage source can be described by the following equation

$$V = \frac{1}{2} v_{dc} M \sin(\omega + \delta) + harmonic.terms \qquad (2.1)$$

Where, M is the modulation index which is defined as the ratio of the peak value of the modulating wave and the peak value of the carrier wave, i.e. the DC voltage. ω is the frequency, δ is the phase shift of the output voltage. Variables M, δ and ω can be adjusted by the VSC controller.

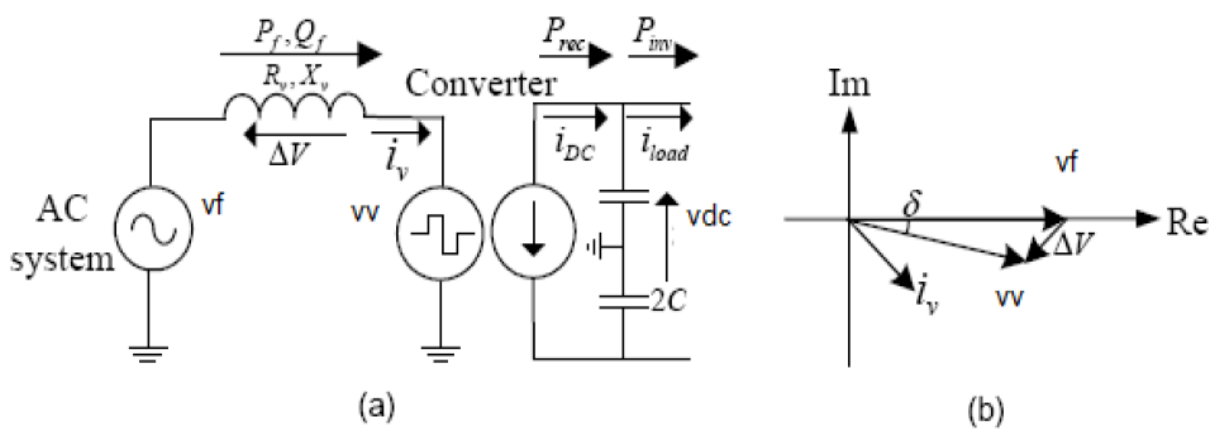

Figure 2.2 (a) Equivalent circuit of the converter connected to an AC system. (b) phasor diagram.

Figure 2.2 (b) also shows the corresponding fundamental frequency phasor representation for a VSC operating as a rectifier and absorbing reactive power from the AC system. In this case the VSC output voltage has smaller amplitude and is phase lagged with respect to the AC system. The active power flow between the AC system and the converter can be controlled by changing the phase angle (δ) between the fundamental frequency voltage (u_v) generated by the VSC and the AC voltage (u_f) on the secondary side of the transformer. The active power is calculated according to equation (2.2) neglecting the losses of the phase reactor.

$$P_f = \frac{u_f u_v \sin\delta}{X_V} \tag{2.2}$$

The reactive power is determined by the amplitude of u_v and calculated according to equation (2.3).

$$Q_f = \frac{u_f \left(u_f - u_v \cos\delta\right)}{X_V} \tag{2.3}$$

In a VSC-HVDC connection the active power on the AC side is equal to the active power transmitted from the DC side at steady state (losses neglected). This can be fulfilled if one of the two converters controls the active power transmitted while the other converter controls the DC voltage. The reactive power generation and consumption can be used to control the AC voltage of the network [4].

2.9 Modeling of the VSC-HVDC

Assuming balanced operation of interfacing ac network signifying, absence of zero axis components, the d-q transformed versions of equation (2.4) is:

$$\frac{1}{L_1}\begin{bmatrix} v_{s1}^d \\ v_{s1}^q \end{bmatrix} = \begin{bmatrix} \frac{R_1}{L_1} & 0 \\ 0 & \frac{R_1}{L_1} \end{bmatrix}\begin{bmatrix} i_{s1}^d \\ i_{s1}^q \end{bmatrix} + \begin{bmatrix} 0 & -\omega \\ \omega & 0 \end{bmatrix}\begin{bmatrix} i_{s1}^d \\ i_{s1}^q \end{bmatrix} + \frac{d}{dt}\begin{bmatrix} i_{s1}^d \\ i_{s1}^q \end{bmatrix} + \frac{1}{L_1}\begin{bmatrix} v_{c1}^d \\ v_{c1}^q \end{bmatrix} \tag{2.4}$$

Equation (2.4) with currents along d-q axes i_{s1}^d, and i_{s1}^q, as state variables, can be written in state space form $\dot{x} = Ax + Bu$ as

$$\frac{d}{dt}\begin{bmatrix} i_{s1}^d \\ i_{s1}^q \end{bmatrix} = \begin{bmatrix} -\frac{R_1}{L_1} & \omega \\ -\omega & -\frac{R_1}{L_1} \end{bmatrix}\begin{bmatrix} i_{s1}^d \\ i_{s1}^q \end{bmatrix} + \frac{1}{L_1}\begin{bmatrix} v_{s1}^d - v_{c1}^d \\ v_{s1}^q - v_{c1}^q \end{bmatrix} \tag{2.5}$$

The active power balance between the ac and the dc side if the converter is lossless can be expressed as in *dq* frame for rectifier side (VSC1):

$P_{ac} = P_{dc} + P_c$

$$\frac{3}{2}\left(V_{c1}^d.I_{s1}^d + V_{c1}^q.I_{s1}^q\right) = V_{dc1}.I_{dc} + c\frac{dV_{dc1}}{dt}V_{dc1} \tag{2.6}$$

The relationship between the converter ac and dc side voltages on rectifier and inverter sides:

$$\begin{bmatrix} v_{c1}^d \\ v_{c1}^q \end{bmatrix} = \frac{M_1 V_{dc1}}{2}\begin{bmatrix} \cos\delta_1 \\ \sin\delta_1 \end{bmatrix} \tag{2.7}$$

$$\begin{bmatrix} v_{c2}^d \\ v_{c2}^q \end{bmatrix} = \frac{M_2 V_{dc2}}{2}\begin{bmatrix} \cos\delta_2 \\ \sin\delta_2 \end{bmatrix} \tag{2.8}$$

2.10 Control System Strategy

The main function of the VSC is to generate a fundamental-frequency ac voltage from a dc voltage, and to control the generated voltage in phase and magnitude. Vector control, typically used to control the VSC-HVDC, consists of inner and outer controllers. The function of the inner controller is to regulate the current such that it follows the references provided by the

outer controllers, and to ensure that the converter is not overloaded during major disturbances. The outer controller is responsible for supplying references values to the inner controller. There are four possible control modes to choose from for the outer controller: constant dc voltage, constant dc power, constant ac voltage, and variable frequency control modes. The choice of the outer controller mode depends on the application of the VSC-HVDC. The dc voltage controller regulates the dc link voltages to ensure the power balance between the sending- and receiving-end converters [5].

CHAPTER THREE

Creation of DC Regional Network

3.1 Introduction

A smart grid is an electricity grid that allows extensive integration of distributed energy resources, uses advance information and communication technologies to deliver electricity more cost-effectively, more sustainably and in response to consumer needs. On the other hand, the deployment of renewable energy sources (RES) in large-sized units (typically above a few hundred MW) will impact on the evolution of the higher voltage (HV) electricity transmission network towards a supergrid concept.

DC super-grid can be defined as an electricity transmission system, most likely based on direct current technologies, designed to transport over very long-distances large-scale power from remote areas to consumption centers. DC supergrid could well be a subsystem embedded in a traditional transmission grid, i.e. a high transfer capacity layer superimposed on the traditional transmission system. It has to be stressed that the correlation between transmission super and distribution-smart grids is only approximated and certainly loose. Some reasons for this are: the border between transmission and distribution systems cannot always be clearly identified and will dynamically change; transmission will also become smarter since further intelligence is needed to better interact with completely redesigned distribution systems and to more effectively balance intermittent renewable [6].

The fundamental process that occurs in DC system is the conversion of electrical current from AC to DC (rectifier) at the transmitting end and from DC to AC (inverter) at the receiving end.

3.2 Components of DC System

The main function of DC system is to share the power from a common power pool connected to regional network through a power converter. Any AC network could inject/or withdraw power from the network employing power converter and control system. The main components of DC network are:

3.2.1 Power Converter

The converters are VSCs employing IGBT power semiconductors, one operating as a rectifier and the other as an inverter. The two converters are connected either back-to-back or through a dc cable, depending on the application.

The insulated gate bipolar transistor (IGBT) valves used in VSC converters are comprised of series-connected IGBT positions. A complete IGBT position consists of an IGBT, an anti parallel diode, a gate unit, a voltage divider, and a water-cooled heat sink. Each gate unit includes gate-driving circuits, surveillance circuits, and optical interface. The gate-driving electronics control the gate voltage and current at turn-on and turn-off, to achieve optimal turn-on and turn-off processes of the IGBT.

3.2.2 Transformers

Normally, the converters are connected to the ac system via transformers. The most important function of the transformers is to transform the voltage of the ac system to a value suitable to the converter. The leakage inductance of the transformers is usually in the range 0.1-0.2p.u. [7].

3.2.3 Phase Reactors

The phase reactors are used for controlling both the active and the reactive power flow by regulating currents through them. The reactors also function as ac filters to reduce the high frequency harmonic contents of the ac currents which are caused by the switching operation of the VSCs.

3.2.4 AC Filters

The ac voltage output contains harmonic components, derived from the switching of the IGBTs. These harmonics have to be taken care of preventing them from being emitted into the ac system and causing malfunctioning of ac system equipment or radio and telecommunication disturbances. High-pass filter branches are installed to take care of these high order harmonics. With VSC converters there is no need to compensate any reactive power consumed by the converter itself and the current harmonics on the ac side are related directly to the PWM frequency. The amount of low-order harmonics in the current is small.

3.2.5 DC Capacitors

On the dc side there are two capacitor stacks of the same size. The size of these capacitors depends on the required dc voltage. The objective for the dc capacitor is primarily to provide a low inductive path for the turned-off current and energy storage to be able to control the power flow. The capacitor also reduces the voltage ripple on the dc side.

3.2.6 DC Cables

The cable used in dc network applications is a new developed type, where the insulation is made of an extruded polymer that is particularly resistant to dc voltage [7].

3.3 Converter Topology

The converters so far employed in actual transmission applications are composed of a number of elementary converters, that is, of three-phase, two-level, six-pulse bridges, as shown in Figure: 3.1 (a), or three phase, three-level, 12-pulse bridges, as shown in Figure: 3.1 (b). The two-level bridge is the most simple circuit configuration that can be used for building up a three-phase forced commutated VSC bridge. The IGBTs can be switched on and off with a constant frequency of about 2 kHz. The IGBT valves can block up to 150kV [7].

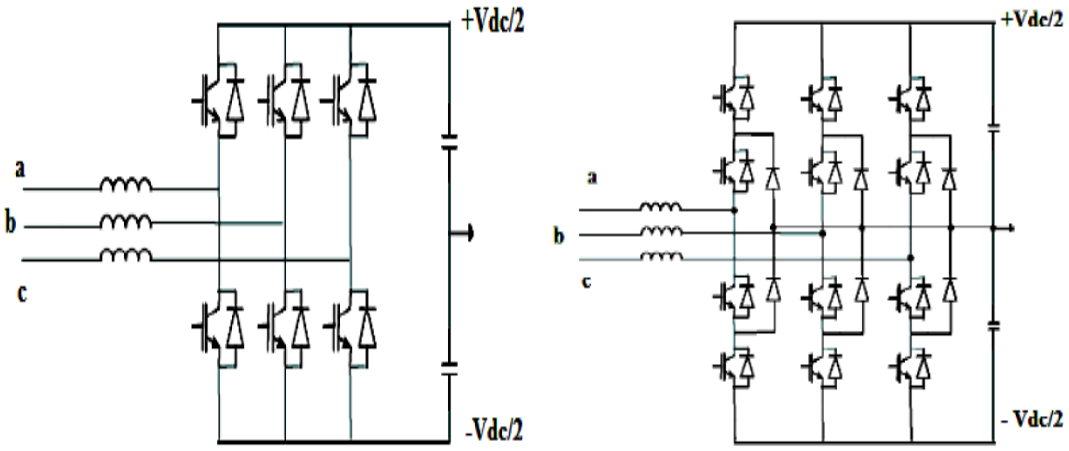

Figure 3.1: (a) Two level converter (b)Three level converter

3.4 Control of power converter

The power converter is controlled using PWM and control system loops.

3.4.1 PWM Generator Scheme

Pulse width modulation is one of most common strategies to control the ac output of a VSC converter. PWM varies the duty cycle of the converter switches at a high switching frequency; the output waveform is then averaged to produce the low-frequency output voltage (or current). The main

advantage of PWM is the elimination of low-order harmonics in the output waveform. The only conflict comes from the energy losses due to the frequent switching of the converter reducing its efficiency.

The principle of the sinusoidal PWM scheme for the two-level inverter is illustrated in figure 3.3, where v_{mA} , v_{mB} and v_{mC} are the three-phase sinusoidal modulating waves and v_{cr} output voltage can be controlled by amplitude modulation index (m_a)

$$m_a = \frac{\hat{V}_m}{\hat{V}_{cr}} \tag{3.1}$$

Where $\hat{V}_m$ and $\hat{V}_{cr}$ are the peak values of the modulating and carrier waves, respectively.

The amplitude modulation index m_a is usually adjusted by varying $\hat{V}_m$ while keeping $\hat{V}_{cr}$ fixed. The frequency modulation index is defined by:

$$m_f = \frac{f_{cr}}{f_m} \tag{3.2}$$

Where f_m and f_{cr} are the frequencies of the modulating and carrier waves, respectively.

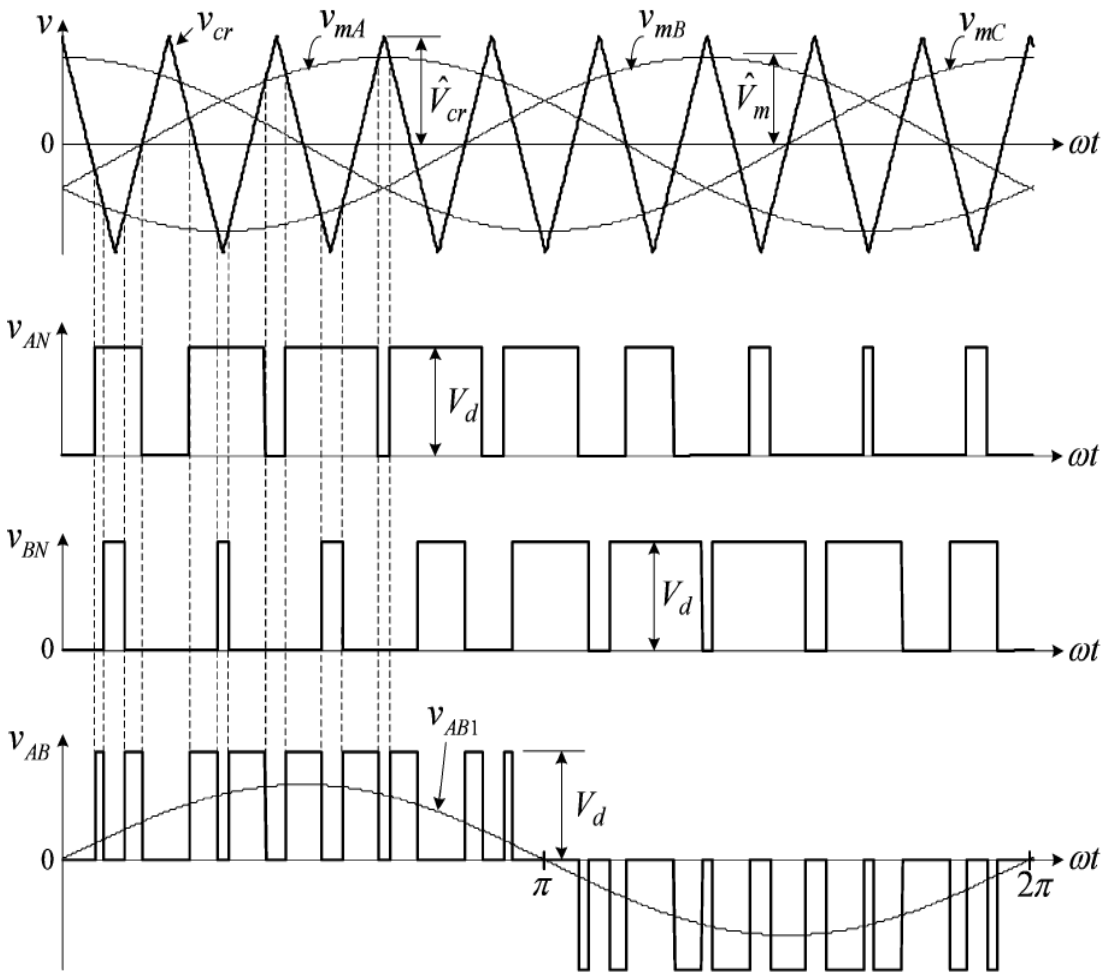

Figure 3.2 Sinusoidal pulse-width modulation (SPWM).

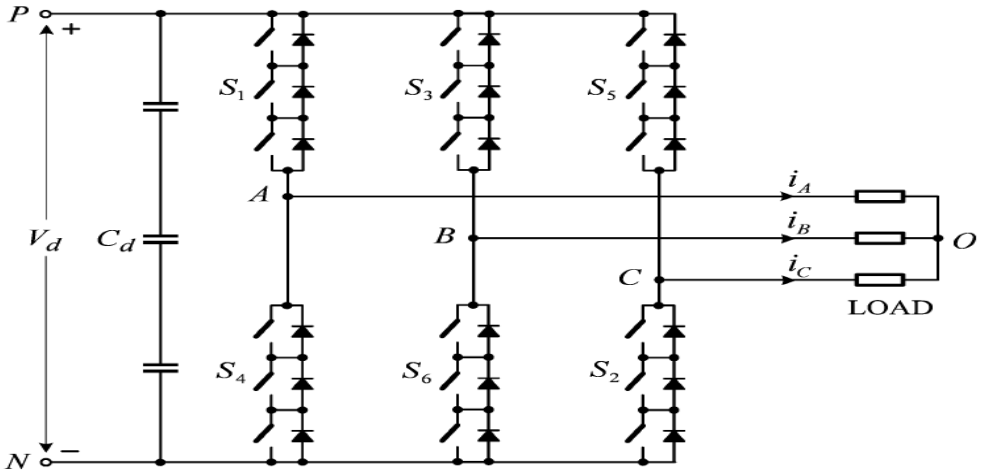

Figure: 3.3Simplified two-level inverter for high-power applications.

The operation of switches S_1 to S_6 is determined by comparing the modulating waves with the carrier wave. When $v_{mA} \geq v_{cr}$ the upper switch S1 in inverter leg A is turned on. The lower switch S4 operates in a complementary manner and thus is switched off. The resultant inverter terminal voltage v_{AN} , which is the voltage at the phase A terminal with respect to the negative dc bus N, is equal to the dc voltage V_d. When $v_{mA} \prec v_{cr}$ the lower switch S4 is on and the upper switch S1 is off, leading to $v_{AN} = 0$ as shown in Figure 3.3. The inverter line-to-line voltage v_{AB} can be determined by $v_{AB} = v_{AN} - v_{BN}$. The waveform of its fundamental-frequency component v_{AB} the upper switch is also given in the figure. The magnitude and frequency of v_{AB} can be independently controlled by m_a and m_f , respectively. The selection of the frequency modulation index m_f is very important since this ratio determines the harmonic spectrum of the output waveform. A higher value of the frequency modulation index produces the lowest harmonic amount but at the same time increases the VSC losses [8].

3.4.2 Direct control

The direct control method uses voltage control of the VSC. The active and reactive power flows are controlled by directly altering the phase shift δ, and the modulation index *M* thus the magnitude of the converter voltage. The actual power angle is calculated from the terminal quantities and compared to the desired power angle, which is calculated from the active power order. The error in the power angle is processed by a power angle controller to

generate the reference phase angle of the modulating signal. In a similar manner, the error between the actual and desired reactive power is processed by a reactive power controller to generate the magnitude reference of the modulating signal. A phase-locked loop (PLL) circuit is responsible for synchronizing the converter output voltage with the AC grid. The control scheme is shown in Figure 3.4.

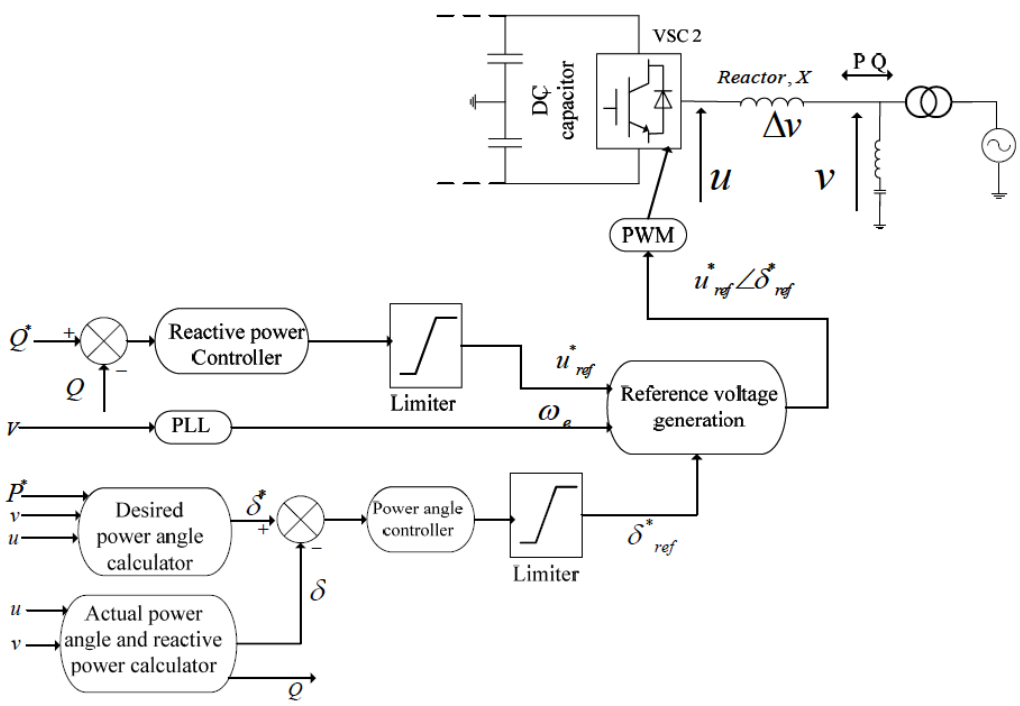

Figure 3.4 Direct control principle of VSC-HVDC

A change in the converter voltage angle does influence both P and Q so does a change in magnitude of the converter voltage u as seen in equation (3.3) and (3.4).

$$P = \frac{|v||u|\sin\delta}{X} \tag{3.3}$$

$$Q = \frac{|v|\left(|v| - |u|\cos\delta\right)}{X} \tag{3.4}$$

3.4.3 Vector control

The most widely used control scheme for VSC-HVDC is vector control. This method controls the converter voltage to track a current order injected into the AC network. The vector control scheme involves representation of three-phase quantities in the *dq* synchronous reference frame. The transformation of phase quantities to *dq* - coordinates involves two steps: a transformation from the three-phase stationary coordinate system to the two-phase αβ stationary coordinate system and a transformation from the αβ stationary coordinate to the *dq* rotating coordinate system. Power invariant Clark and Park transformation are used to convert between the reference frames. The zero-sequence components will not be considered in the coordinate transformation as balanced three-phase modeling is adopted. One of the most advantageous characteristics of vector control is that vectors of AC currents and voltages occur as constant vectors in the steady state, and hence static errors in the control system can be successfully removed by applying PI controllers [9].

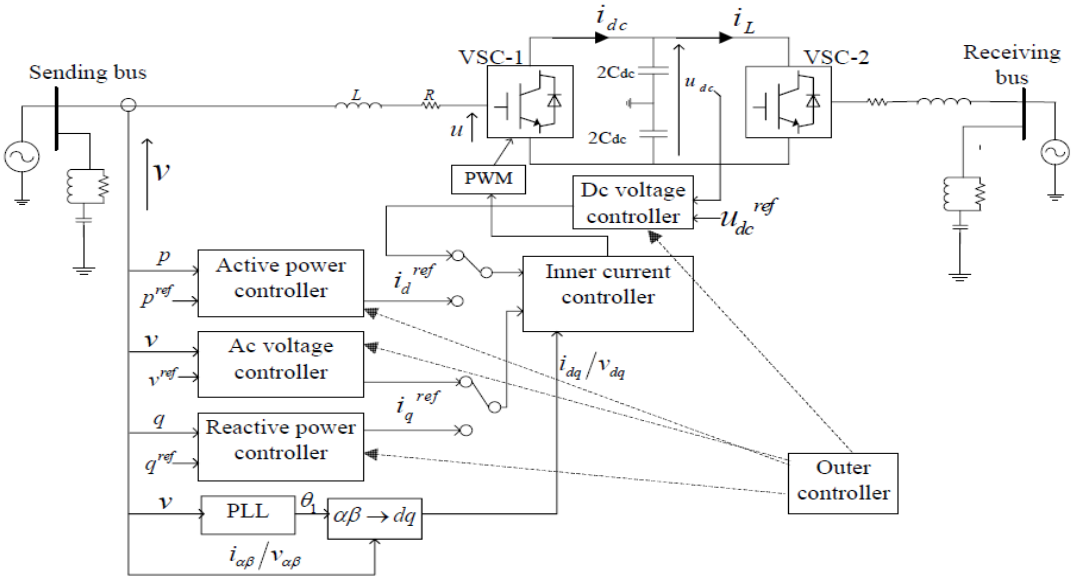

Figure 3.5 Vector control scheme of VSC-HVDC.

3.5 Controlling flows in the DC system

The power injections in a DC grid are controlled by the converters. However, the flow in each line is not constant and power in the meshed system will flow according to the laws of Kirchhoff and cannot be directly controlled. However, the impedance of the lines is a simple resistance, and there is no reactive power. This means that dc power and current are calculated as follow:

$$P_{dci} = \frac{\left(V_{dci} - V_{dcj}\right)}{R_{dcij}} V_{dci} \tag{3.5}$$

$$I_{dci} = \frac{\left(V_{dci} - V_{dcj}\right)}{R_{dcij}} \tag{3.6}$$

The flows are determined completely by the voltages at the nodes, or rather the voltage difference between the nodes. Nodes where a high amount of power is injected will have a higher DC voltage than those that withdraw power from the DC bus. In order to maintain the DC bus voltage at a correct level, the voltage must be controlled. The common approach is to use a single slack bus that controls one single DC bus voltage. All other busses will operate in active power control mode, resulting in local DC bus voltages that differ from the reference voltage according to their injection/withdrawal and the DC grid impedances. The reference node must ensure that all voltages in the entire system remain within bounds. In this slack node, the injected/withdrawn power P_{slack} is equal to:

$$P_{slack} = \left(- \sum_{i \neq slack} P_i \right) + P_{loss} \tag{3.7}$$

Where P_i is the injected power at node i and P_{loss} is the DC loss.

As the flows themselves cannot be controlled, only the injections, congestion might occur in the DC system. In such an event, this is easily

countered by a correct re-dispatch of the power injections in the different nodes, very similar to the situation in AC systems.

A problem might arise when a node is suddenly disconnected. This loss of a node will create an immediate imbalance on the DC grid. This imbalance will need to be removed by immediate control actions. This could potentially be done by the slack bus, if it has enough spare capacity to do so. However, this is not necessarily so, and in case the slack bus is failing, another solution is needed [1].

In general the main feature of control system adopted with dc networks are:

1. Limit the maximum dc current.

Due to a limited thermal inertia of the thyristor valves to sustain over-currents, the maximum dc current is usually limited to less than 1.2 p.u. for a limited period of time.

2. Maintain a maximum dc voltage for transmission.

This reduces the transmission losses, and permits optimization of the valve rating and insulation.

3. Minimize reactive power consumption.

This implies that the converters must operate at a low firing angle. A typical converter will consume reactive power between 50-60% of its MW rating.

4. Other features.

Such as the control of frequency in an isolated Ac system or enhance power system stability.

3.6 Protection and grounding

The protection system may be the main problem when considering dc network. The existing dc network system protection disconnects the entire DC system by activating AC switchgear. When a single line is considered, the difference between opening the faulted cable and removing the entire DC

line is small from a system point of view. However, it is not acceptable to disconnect the entire DC backbone each time a fault occurs. There are four main reasons why protecting a DC system is more difficult than protecting AC systems:

1. When a fault occurs in the DC system between pole and ground the capacity between shield and conductor will cause a discharge wave of amplitude U = Z_0 (with $Z_0 = \sqrt{L/C}$). This wave will propagate through the cable in both directions, slightly attenuated by the low cable resistance. Reflections will appear at intersections and other changes in characteristic impedance. The characteristic impedance of an XLPE cable is typically well below 100 V, and significantly lower than that of overhead lines. This leads to very high short-circuit currents, with steep wave front.

2. The DC converters are built from power electronic components, which are not only very expensive, but also very sensitive to overloads.

3. Switching DC currents is not trivial. As the current does not pass through zero, the arc created when using traditional AC protection devices is not easily extinguished. Special techniques with traditional devices or newly developed devices must be developed.

4. In a meshed system it is important to disconnect the correct (faulted) line, but keep the remaining system operational [1].

A choice must be made between high and low impedance grounding, where the former will reduce the fault current while the latter will not double the pole-to-earth voltage on the non-faulted line during faults.

Three methods of extinguishing the dc fault current have been developed:

1. AC Circuit Breakers on the ac side of the VSCs (cheapest but longest interruption time).

2. IGBT Circuit Breakers (IGBT-CBs) placed between each VSC and the dc network (intermediate interruption time).

3. IGBT-CBs at each end of a dc branch line (most expensive but with no interruption of service).

The protection cycle is envisaged as follows: the presence of a Line-to-Ground DC Fault or a Line-to-Line DC Fault is detected, whereupon the IGBT-Circuit Breakers (IGBT-CB) and the IGBTs of the VSCs block to protect the VSCs. In order to extinguish the fault current, it is necessary to block all the VSCs and IGBT-CBs thus causing a brief disruption of service [10].

3.7 Communication

Depending on the control system that is going to be implemented, fast and reliable communication between different substations might be required. Phasor Measurement Units (PMU) or similar devices might be required when timestamps are required.

First of all, the reference power settings must be communicated. This can be done by relatively slow and low bandwidth communication. In case dynamic control of the terminal outputs based on remote signals is needed, for instance when the DC link would be used as a power system oscillation damper between two (or more) nodes, multiple converters need to operate in a coordinated manner in a very short time interval. This requires significant bandwidth and a high reliability of the transmission for a short time interval. In case the protection system would require communication, this would require extreme quick (ms) communication for small bandwidths. In this case, the transmission medium should be modeled as well (e.g. satellite communication is not an option because of the traveling time) [1].

3.8 AC/DC Interface

The interface between the ac and dc systems has a great significance on the operation of the dc system. Different topologies have different possibilities to control the power flow. The more the power can be controlled, the higher the cost. A proper AC/DC interface for a future dc distribution system shall provide a controllable dc-link voltage, high power quality, bi-directional power flow, and high transient performance during faults and disturbances. Moreover, it must have low losses and low costs. Bi-directional power flow capability is necessary if it shall be possible to transfer power from the DC system to the AC system during low-load, high-generation condition in the DC system. Galvanic isolation prevents having a path between the AC and DC systems in case of a fault [2].

3.9 The road to a supergrid

As seen from the previous sections, the supergrid is not something for the immediate future. This does not mean that parts of such a supergrid cannot be built sooner. Newly built connections, or even already existing circuits can later be connected and integrated into a single system. However, most installed HVDC connections, including newly planned lines use LCC technology. The possibility of mixing LCC and VSC HVDC technology in a singly multi-terminal system is quite uncertain and might be limited to reusing some components in the system such as the cable connections. Also, the supergrid will not be completely built in one project. Similar to the construction of the grid at that time 400 kV AC supergrid in the 50 s and 60 s, a step-by-step development is much more likely. A possible scenario is the one where first point-to-point connections to offshore AC grids (one or more wind farms) are formed, which can be later interconnected to different

systems by a new line. Later several of these smaller systems can be connected. At first only the regions with the highest economic potential are connected, with later expansions if economically viable [1].

3.10 Converter Model

The dynamic model of a three phase grid interfaced VSC, as shown in Figure 3.6, consists of models of the AC and DC sides, and equations to link them.

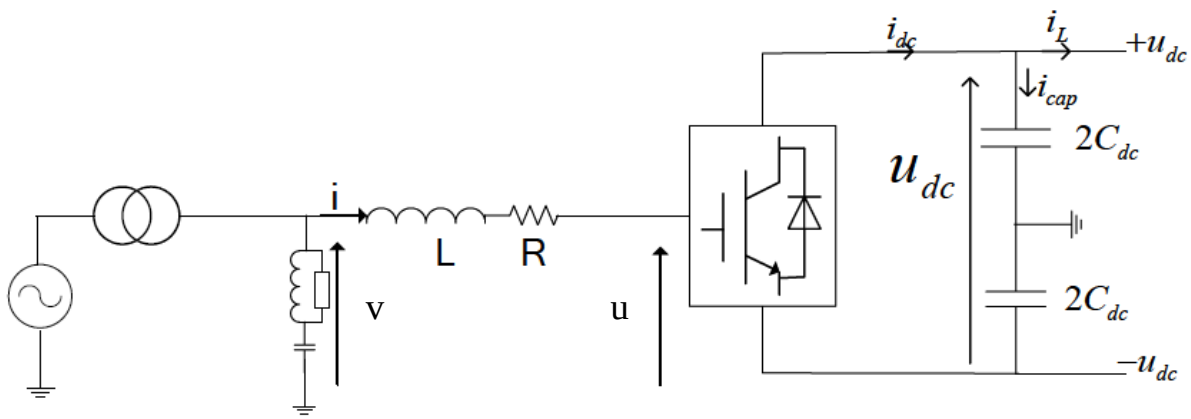

Figure 3.6 Single line diagram representation of VSC.

In stationary coordinates, seen from the filter bus voltage towards the converter, the AC-dynamics are given by the dynamics of the phase reactors.

$$L\frac{di_{\alpha\beta}}{dt} = v_{\alpha\beta} - u_{\alpha\beta} - Ri_{\alpha\beta} \tag{3.8}$$

Transforming Eqn. (3.8) to synchronous coordinates,

$$L\frac{di_{dq}}{dt} = v_{dq} - u_{dq} - (R + j\omega_e L)i_{dq} \tag{3.9}$$

The term $j\omega_e L i_{dq}$ in equation (3.9) represents the time derivative of the synchronous rotation of the dq reference frame. Equation (3.9) can be rewritten as:

$$L\frac{di_d}{dt} = -Ri_d + \omega_e L i_q - u_d + v_d \tag{3.10}$$

$$L\frac{di_q}{dt} = -Ri_q - \omega_e L i_d - u_q + v_q \tag{3.11}$$

3.11 Inner Current controller

The inner current control loop can be implemented in the *dq* -frame, based on the basic relationship of the system model. The control loop consists of controllers, decoupling factors and feed-forward terms as will be described further. The current control block is represented by the following general block diagram.

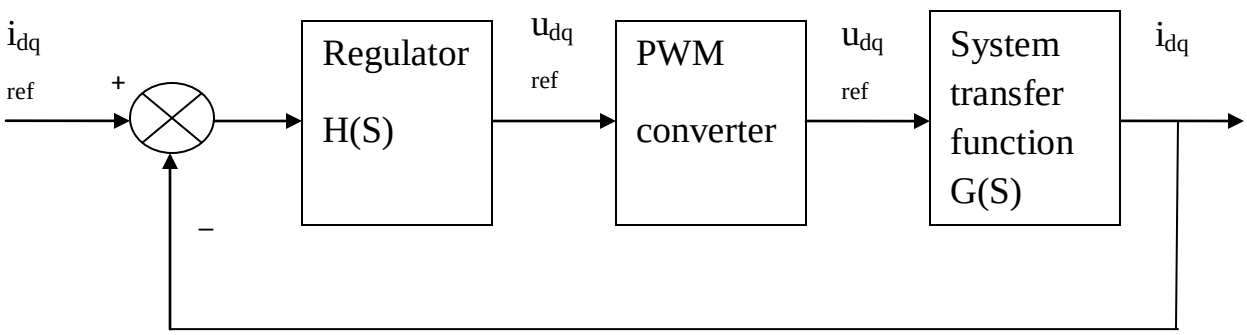

Figure 3.7 General block diagram of inner current controller

3.12 Outer controllers

The outer controllers consist of direct voltage controller, AC voltage controller and active power controller. The simplified diagram of the cascaded control system is shown in figure 3.8 [8].

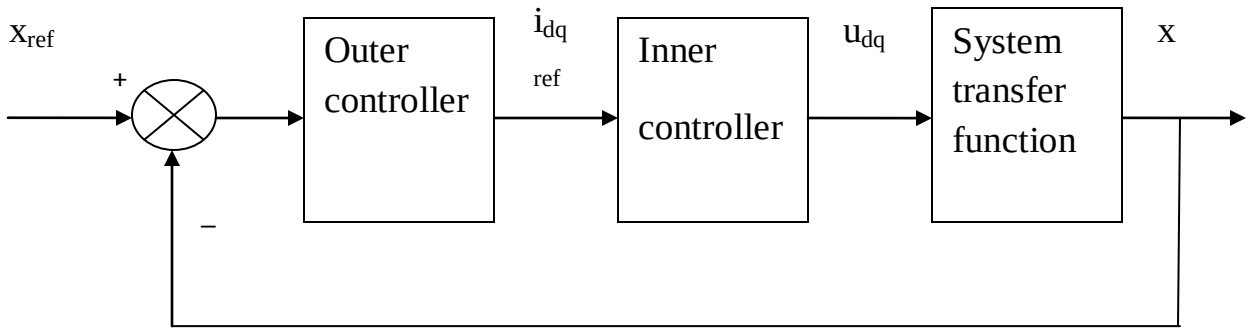

Figure 3.8 Outer controller scheme

Where X_{ref} denotes the desired set point of the outer controllers, and X is the actual value of the controlled variable.

CHAPTER FOUR

SIMULATION AND RESULT

4.1 Introduction

The VSC converter can control the active and reactive power independently. The reactive power can be controlled separately in each converter by the required AC voltage or set manually. The active power flow can be controlled by manipulating the converter load angle. This means that the active power flow, the reactive power flow, the AC voltage, the DC voltage can be controlled when using VSC-HVDC. The control system of the VSC converter is a cascade control system; it typically consists of a faster vector controller. Furthermore, the vector controller is completed by additional controllers which supply the references for the vector controller. Thus, the vector controller will be the inner loop and additional controllers will be the outer loop. The outer controllers include the DC voltage controller, the AC voltage controller, the active power controller, the reactive power controller or the frequency controller. The choice of different kinds of controllers will depend on the application and may require advanced power system studies. For example, in VSC-HVDC the outer controller may be frequency, active power, DC voltage or AC voltage controller. In STATCOM, the outer controllers are DC voltage and AC voltage controller. While in BESS the outer controllers are frequency and AC voltage controller. Active power out from the DC link must equal the active power into the DC link minus the losses in the DC link. Any difference would result in a rapid change of the DC voltage [4].

4.2 DC Pool network system

The interconnection of different regional network using common dc network is getting wide attention recently. This interconnection increases system stability between different networks and enable then to accommodate the power using power electronic converters to inject/withdraw the power according to specific schedule. Figure 4.1 illustrates regional networks interconnected by dc network via power electronic converters in addition to control system to facilitate the power transmission to/from dc network.

A is the slack bus which control the power flow in the system. It used to generate or absorb the required power in order to balance the power in AC and DC side. B and C and D are networks inject or draw power from dc pool while the controllers attached with the converters are used to control the power electronic valves inside converter station.

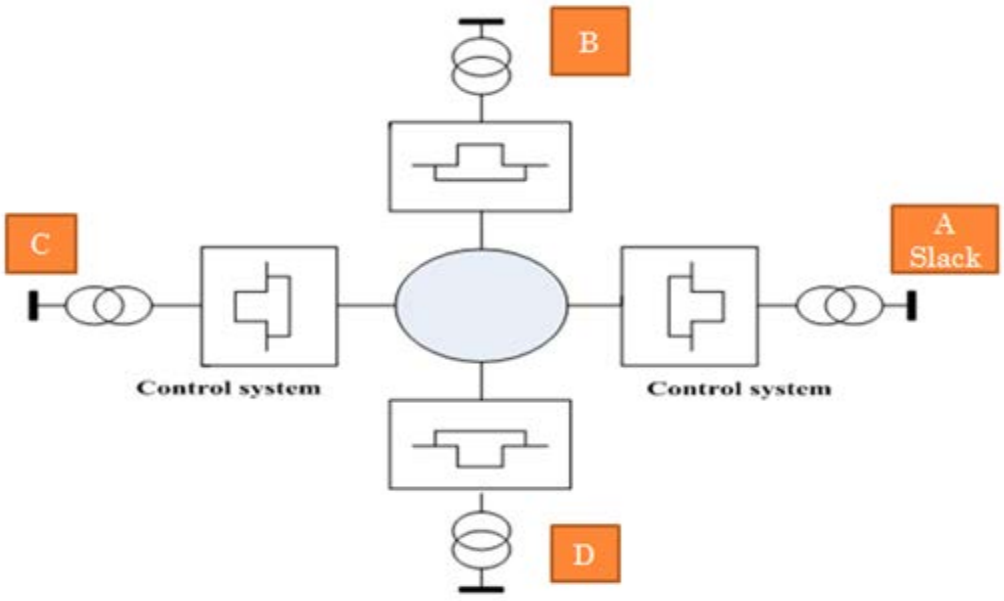

Figure 4.1 DC interconnected network.

4.3 control system design

The investigated model includes four regional networks connected to dc pool via power converters. The operation mode of the outer controllers of the converters is chosen such that VSC_3 controls the dc voltage and the ac voltage at B_3, whilst VSC_1, VSC_2 and VSC_4 controls the active power and the ac voltage at B_1, B_2 and B_4.These controllers provide reference values of the respective direct and quadrature axis currents to the inner current control loop implemented in d-q frame.

4.3.1 Active power controller

The instantaneous active power delivered to the point of common coupling (PCC), in the dq frame is given as:

$$p(t) = \frac{3}{2}[v_{sd}(t).i_{sd}(t) + v_{sq}(t).i_{sq}(t)] \tag{4.1}$$

For balanced steady-state operation v_{sq}=0, therefore equation (4.1) can be expressed as:

$$p(t) = \frac{3}{2}v_{sd}(t).i_{sd}(t) \tag{4.2}$$

Hence, the *dq* current reference values are:

$$i_{sd}^{*} = \frac{2P^{*}}{3v_{sd}} \tag{4.3}$$

Where:

P^{*} = Reference power.

i_{sd}^{*} = Reference current.

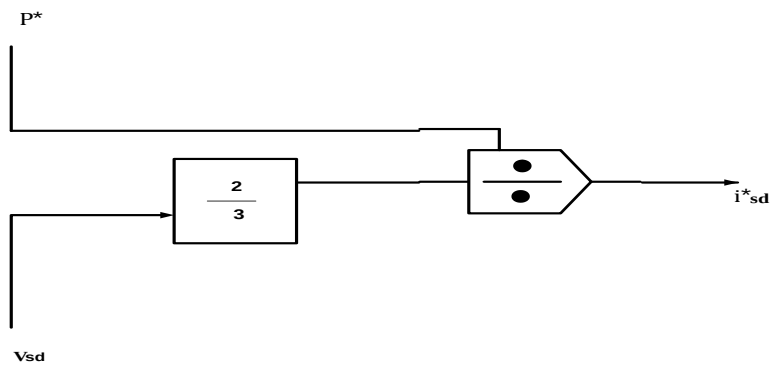

Figure 4.2 Active power controller.

4.3.2 The DC voltage controller

The dc voltage controller is designed using the following equation

$$i_{sd}^{*} = k_{pdc}(V_{dc}^{*} - V_{dc}) + k_{idc}\int(V_{dc}^{*} - V_{dc})dt \qquad (4.4)$$

Where k_{pdc}, k_{idc} *are* the proportional and integral gains of the dc voltage controller. The feed-forward term in equation (4.4) is neglected due to its slow dynamics compared to the inner current control loop.

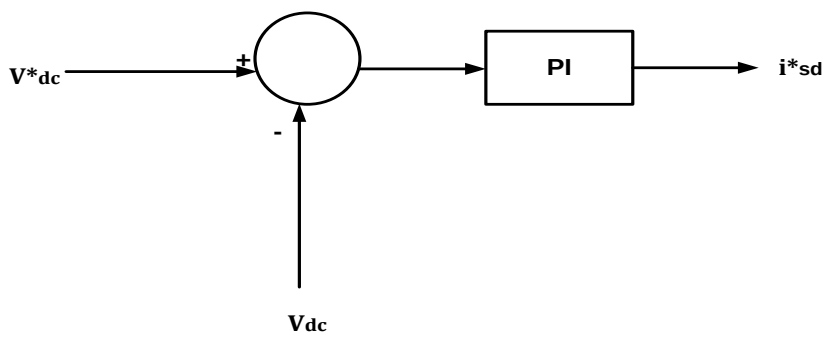

Figure 4.3 DC voltage controller

4.3.3 The AC voltage controller

The ac voltage controller is designed using the following equation

$$i_{sq}^{*} = k_{pac}(V_{ac}^{*} - V_{ac}) + k_{iac}\int(V_{ac}^{*} - V_{ac})dt \qquad (4.5)$$

Where k_{pac}, k_{iac} are the proportional and integral gains of the ac voltage controller.

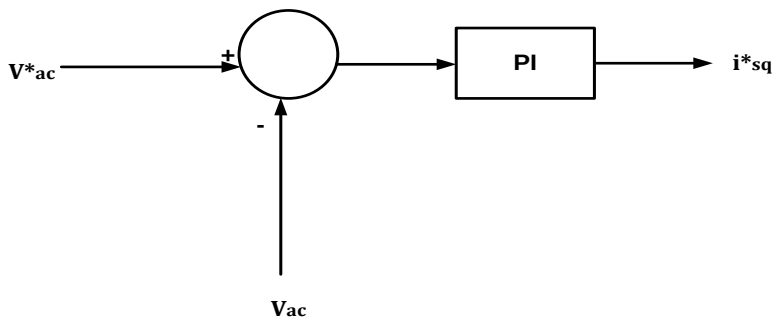

Figure: 4.4 AC voltage controller.

4.3.4 Inner controller

In order to design an inner current controller, the cross-coupling terms in equations (4.6) and (4.7) need to be decoupled as follow:

$$u_{dq1} = v_{sdq1} - v_{cdq1} + j\omega L i_{dq1} \tag{4.6}$$

The variables u_{dq1} are new control variables obtained from PI controllers which regulate the *dq*-axis currents. The values of u_{dq} are defined as:

$$u_{dq1} = k_{pi}(i^*_{sdq1} - i_{sdq1}) + k_{ii}\int(i^*_{sdq1} - i_{sdq1})dt \tag{4.7}$$

where k_{pi} and k_{ii} are the proportional and integral gains of the current controller, and the superscript * refers to the reference value.

The inner control block digram is shown in figure 4.5.

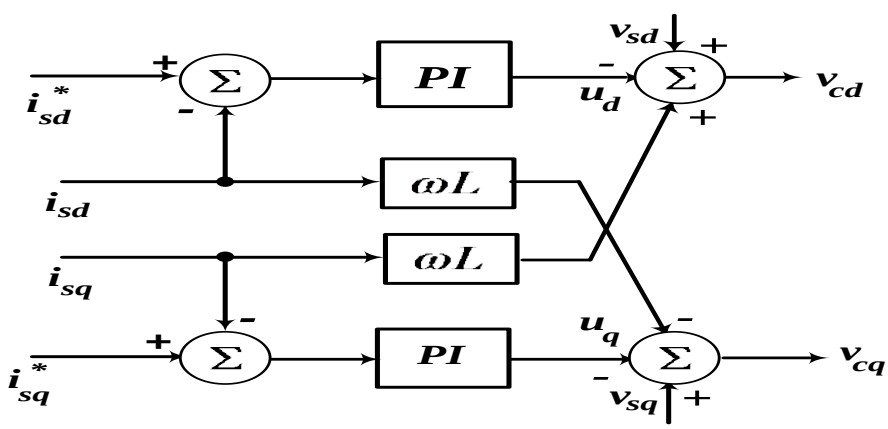

Figure 4.5 The inner control

4.3.5 The overall control system

The overall control system for VSC_1, VSC_2 and VSC_4 including inner and outer controllers is shown figure 4.6 and for slack converter VSC_3 at figure 4.7.

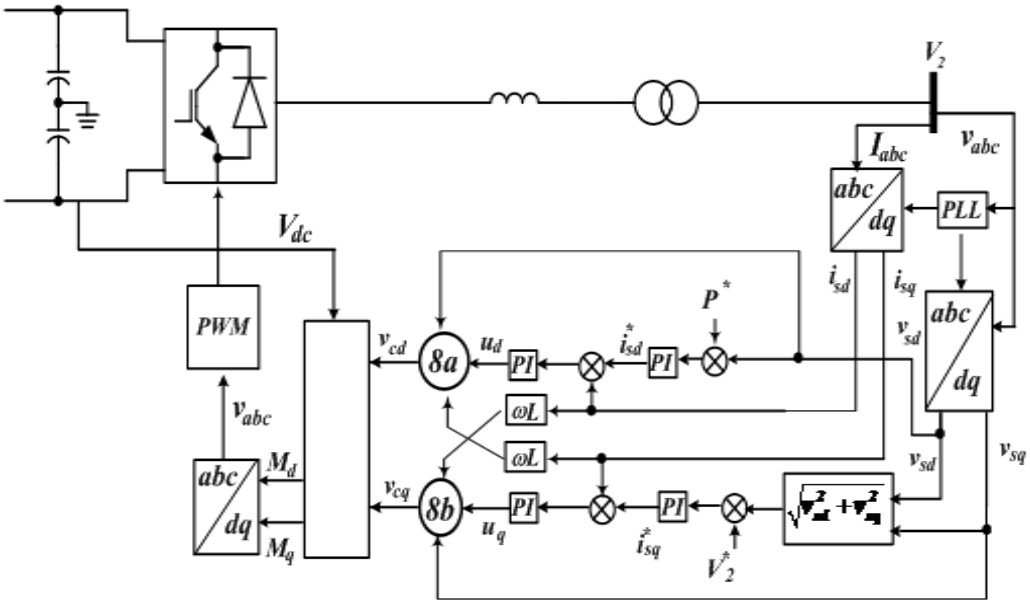

Figure 4.6 power injection converter control system.

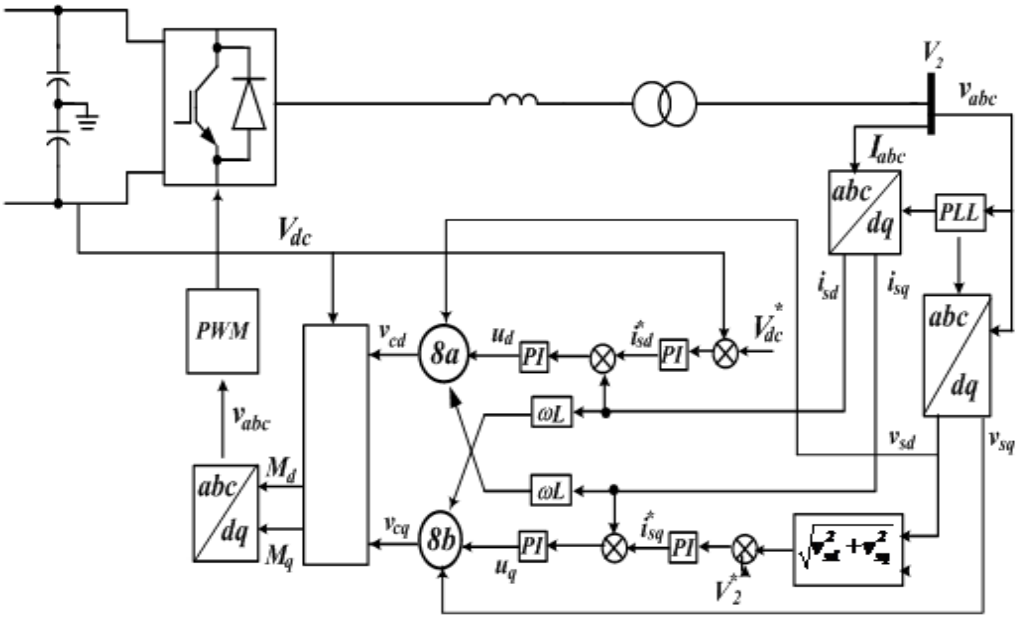

Figure 4.7 Slack bus converter control system

4.4 System behavior during normal schedule

To study the ability of the dc network to control active power flows and provide voltage support at the PCCs (point of common coupling). The pre-setting of the active power controller for VSC_1, VSC_2 and VSC_4 which inject and draw active power to/from the dc network in time interval between 2-8 sec are :

Table: 4.1 Active power flow during normal schedule.

time	**VSC1**	**VSC2**	**VSC4**
$0 \le t \le 2$	400	300	-300
$2 \le t \le 4$	300	200	-200
$4 \le t \le 6$	200	0	-300
$6 \le t \le 8$	100	-100	-200

The negative sign indicate that the converter draw the power from dc network while the positive sign mean the converter inject the power into dc network.

The simulation results are shown in figure 4.8 to figure 4.11 showing the active and reactive power exchange of converter stations e with dc network. As expected the converter terminal of slack converter VSC_3 acts as slack-bus for the whole system, to maintain an active power balance between the ac and dc sides taking dc cable losses in consideration as indicated in equation (3.7).

The simulation results showed in figure 4.12 to figure 4.15 show the power flow in dc cable construction the dc network. The power flow in these cables depends on converters dc voltages and cable resistances as shown in Equ(4.8):

$$P_{dci} = \frac{\left(V_{dci} - V_{dcj}\right)}{R_{dcij}} V_{dci} \qquad (4.8)$$

Figure 4.16 shows that during variations of the active power exchange between dc pool and ac networks, the converter stations are able to maintain constant voltage magnitudes at the points of common coupling using appropriate reactive power exchange with the ac sides.

The results indicate the ability of DC networks in transmitting power from different regional ac networks. In practical, this may help in connecting renewable network which is varies continuously. The variation in renewable network output is balanced using slack bus converter which is connected to strong network

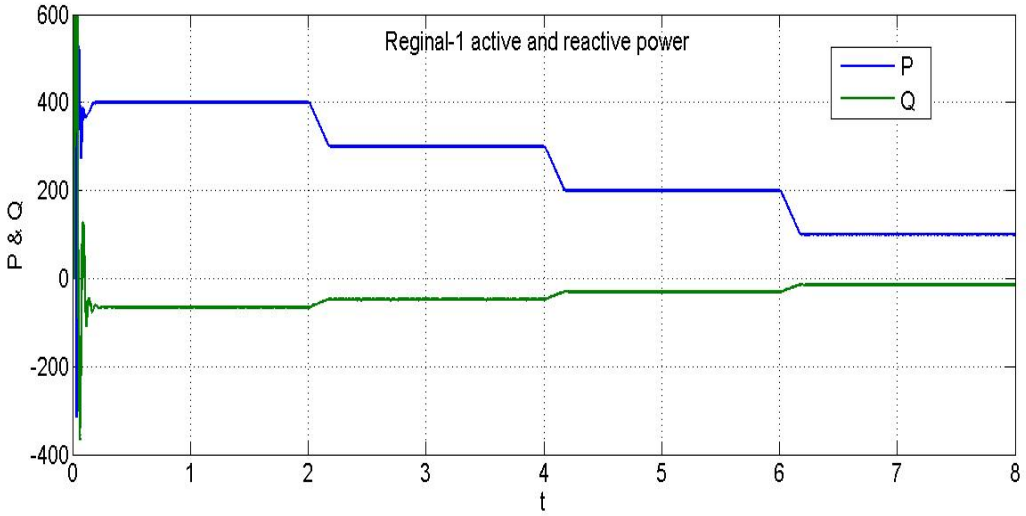

Figure 4.8 network1 active and reactive power at B1

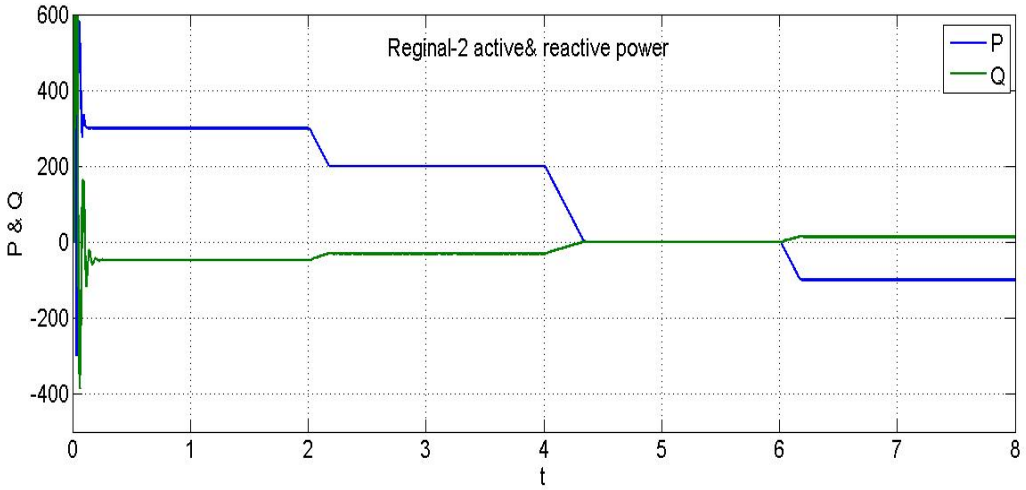

Figure 4.9 network1 active and reactive power at B2

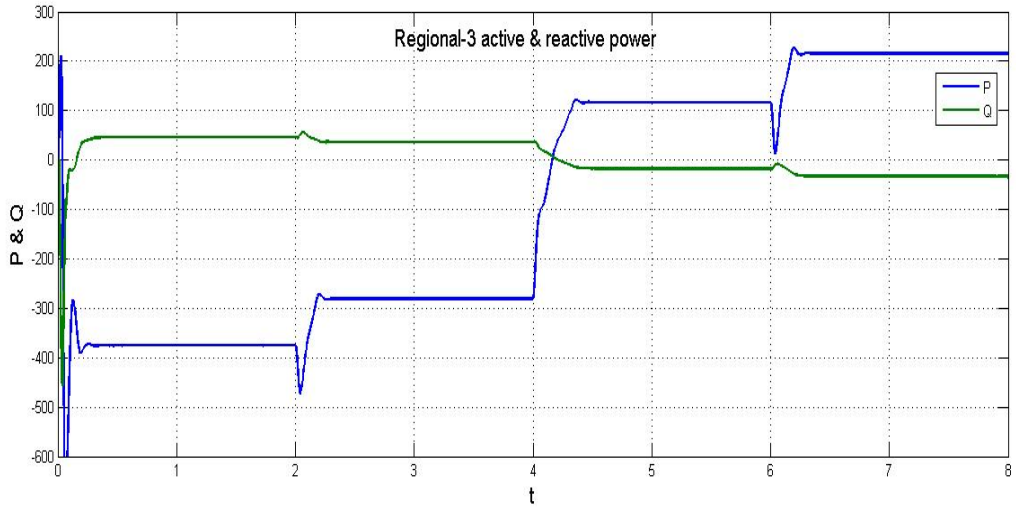

Figure 4.10 network1 active and reactive power at B3

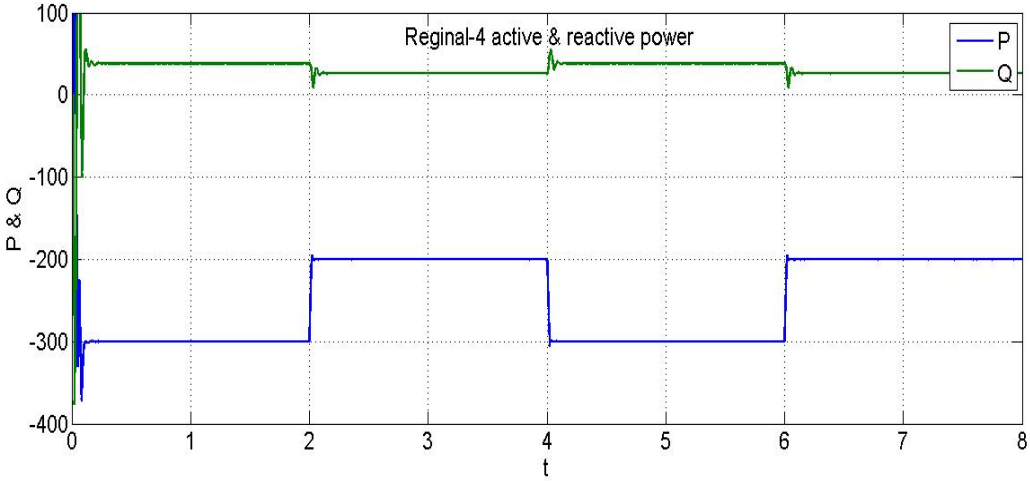

Figure 4.11 network1 active and reactive power at B4

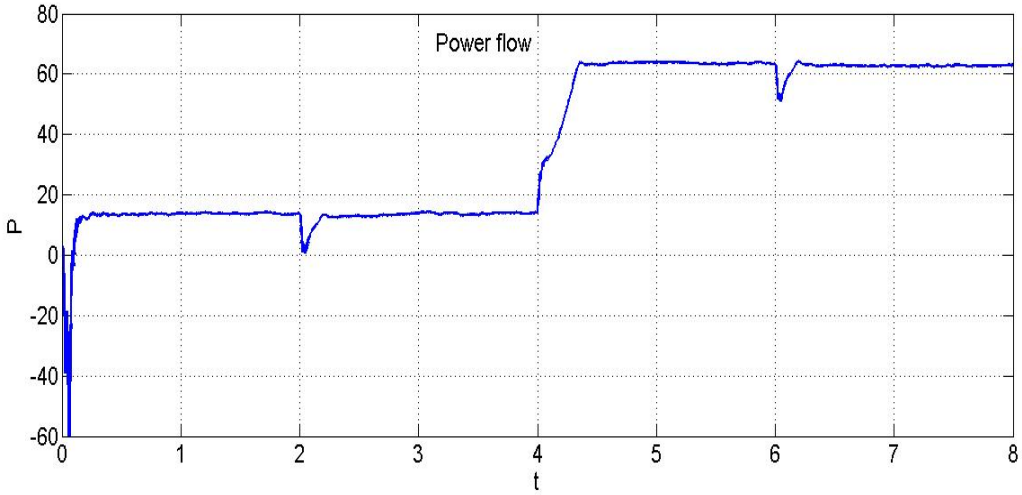

Figure 4.12 active power flows between VSC1 and VSC2

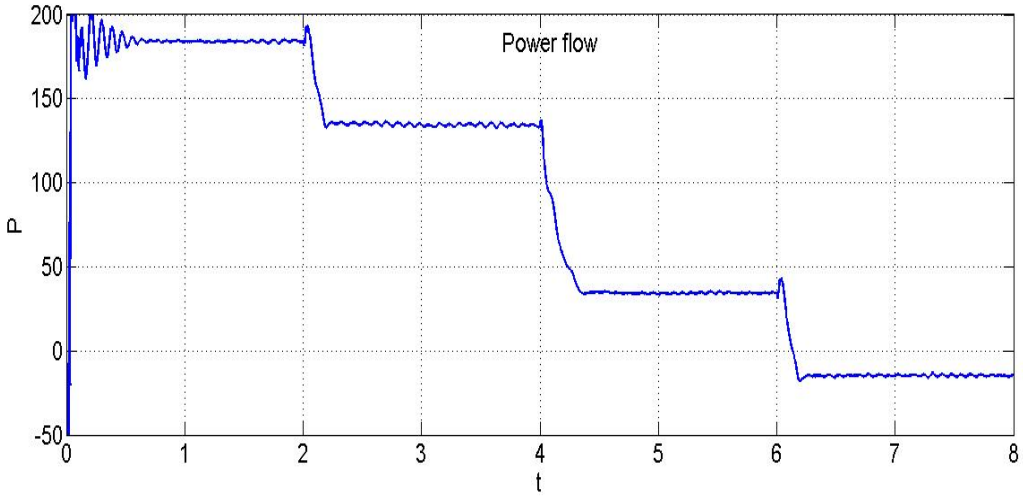

Figure 4.13 active power flows between VSC1 and VSC3

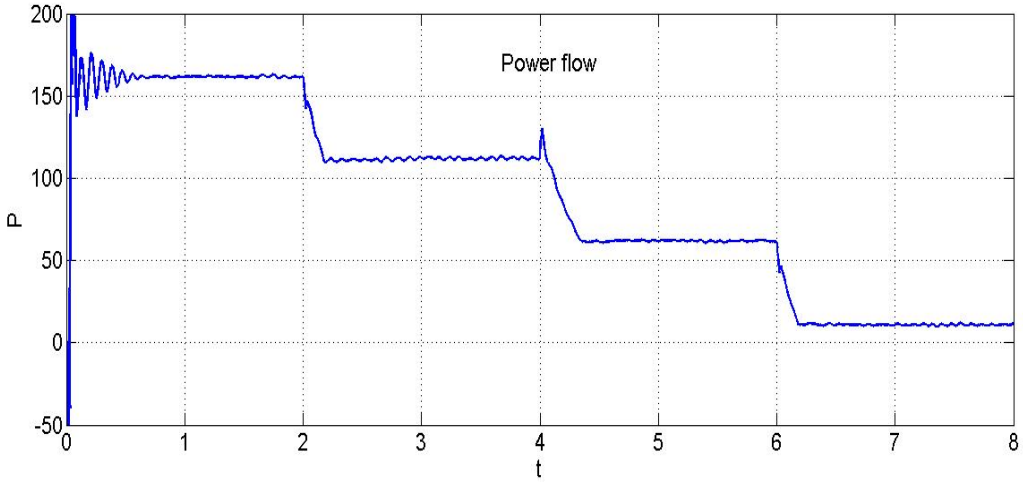

Figure 4.14 active power flows between VSC2 and VSC4

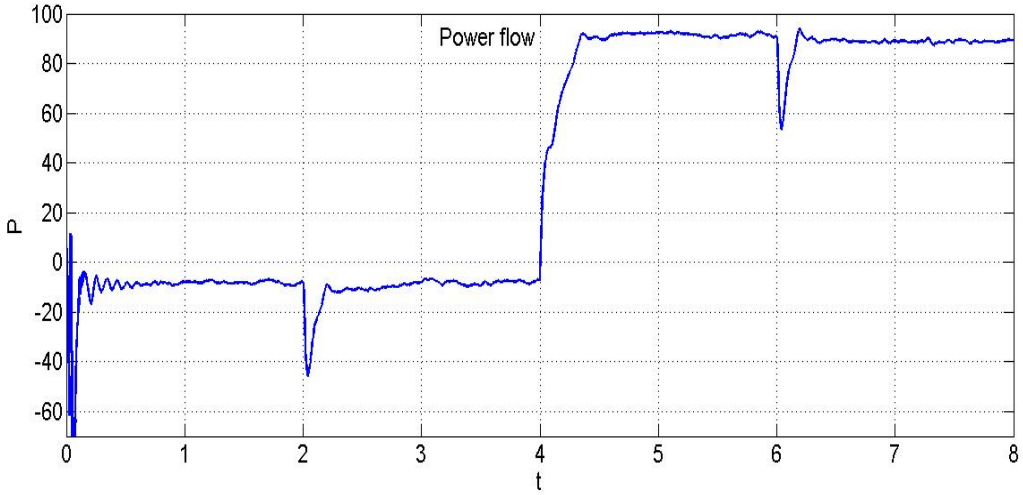

Figure 4.15 active power flows between VSC3and VSC4

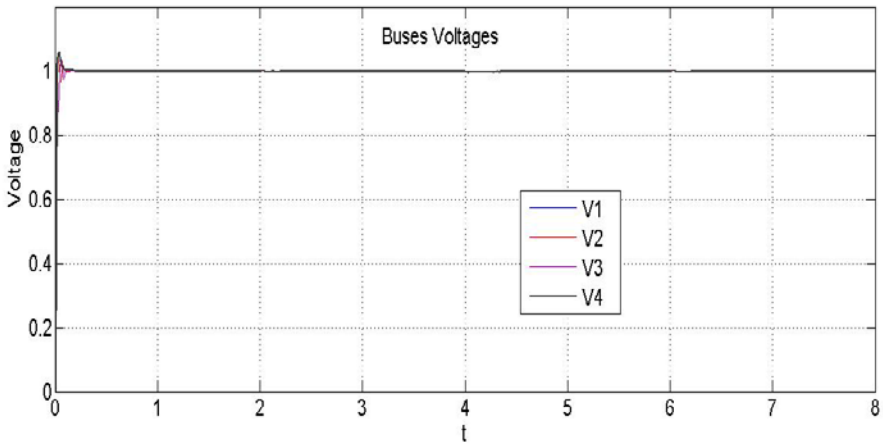

Figure 4.16 Buses Voltages

4.5 System behavior during outage

Interconnection of ac networks via dc network help in isolating each network from other in manner of decoupling operation. This will improve the transient stability of the system during a major fault in one of the ac networks. Any fault in any ac network will not affect healthy network as shown in Figure 4.17 to Figure 4.20. In this case ac network2 is disconnected from the network for period of one second due to three phase fault. At normal case VSC1 inject 400MW, VSC2 inject 300MW, and VSC4 draw 300MW while VSC3 is drawing 400MW to keep the power balance between ac and dc sides. When VSC2 is suddenly disconnected from the network the power balance is regulated by VSC3 which is now just 100MW in order to balance VSC1 and VSC3 powers. Therefore the loss of network has no significant effect on system transient stability. A similar situation will happen with the loss of any converter terminal that controls the active power flow except that regulates the dc voltage which will loss system stability.

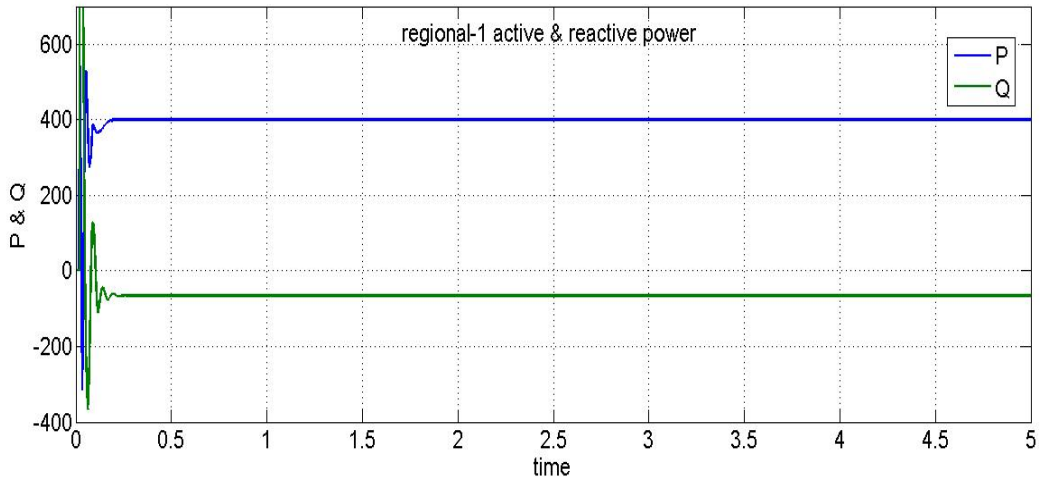

Figure 4.17 network1 active and reactive power at B1

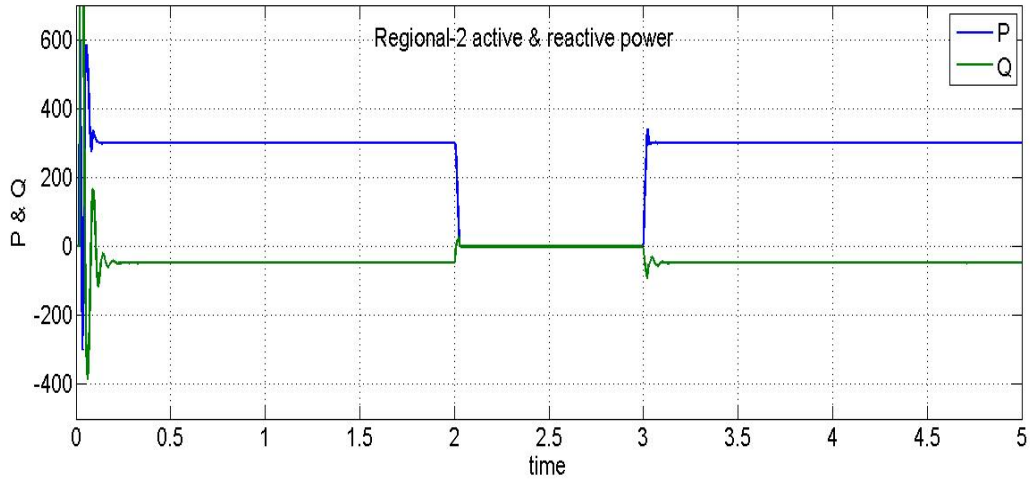

Figure 4.18 network2 active and reactive power at B2

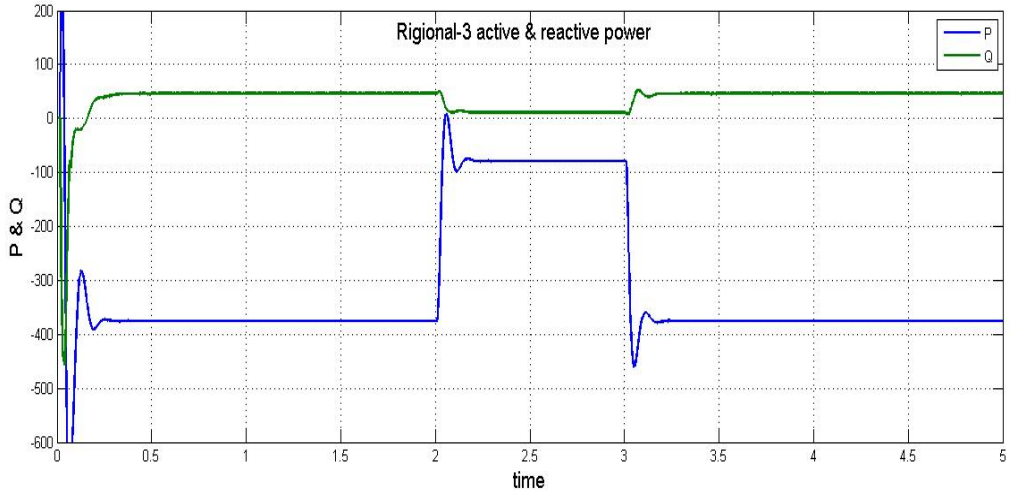

Figure 4.19 network3 active and reactive power at B3

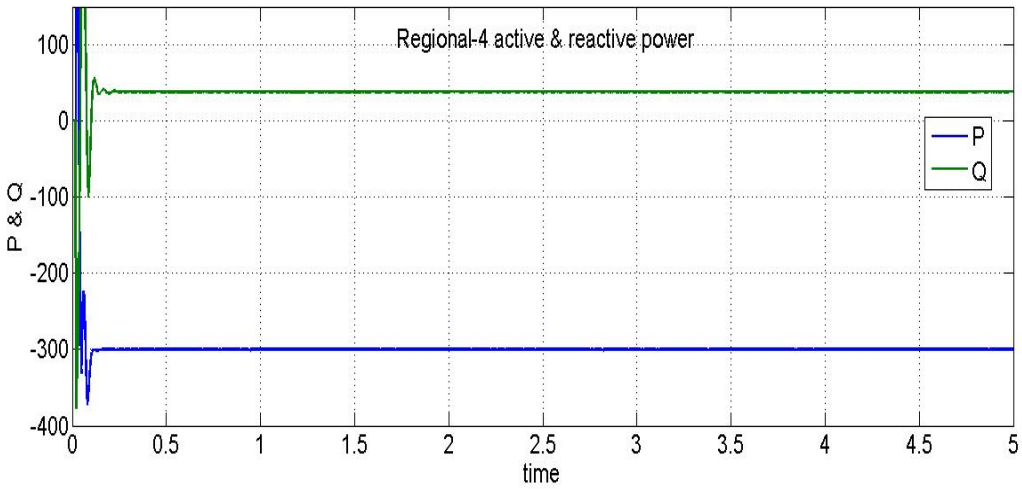

Figure 4.20 network4 active and reactive power at B4

CHAPTER FIVE
CONCLUSION AND RECOMMEDATIONS

5.1Conclusion

The supergrid concept has received much attention in the power industry. This concept allows balancing of energy fluctuations by making use of different energy resources that are geographically spread and connected through the supergrid. It increases the security of supply.

This research introduces a comparison between HVDC and HVAC and summarizes the limitation of both. The main advantage of HVDC is introducing isolated system and they aren't affected when the disturbance occurs.

The creation of the DC network system includes many steps such as building of converter station for AC/DC conversion. Also it is important to implement robust control system for power transmission between the DC pool and AC systems. The signal transmission between the station and control room required efficient communication system.

The proposed model consists of four regions. The slack bus converter is located in the system with high spinning generation in order to balance the power between the ac and dc sides. While the other network is incorporate with active power controller to control power transmission between AC and DC side.

Two scenarios are done and the outputs are analyzed. The results showed that the system is balance and secure during normal condition. While other parts of system aren't affecting during outage.

5.2 Recommendations:-

1- Using of DC network to transmit power in Sudan instead of conventional ac line.

2- Create a Dc regional network in Sahara desert to utilize the solar energy and wind power in the Mediterranean.

3- Develop of novel control techniques for converters control such as fuzzy logic or INN.

References

[1] Dirk Van Hertem and Mehrdad Ghandhari, “Multi-terminal VSC HVDC for the European supergrid”, Renewable and sustainable energy reviews 14(2010) 3156-3163.

[2] DANIEL NILSON, “Distributed Systems”, Thesis for the degree of licentiate of engineering, CHALMERS UNIVERSITY OF TECHNOLOGY, Sweden 2005.

[3] Vijay K. Sood, Ph.D.,FEIC, “HVDC and FACTS controllers, Applications of Static Converters in Power Systems”, Kluwer Academic Publishers,2004.

[4] CUIQING DU, “ VSC-HVDC for Industrial Power Systems”, Thesis for the degree of Doctor of Philosophy, CHALMERS UNIVERSITY OF TECHNOLOGY, Sweden 2007.

[5] O. A. Giddani, Grain P. Adam, Olimpo Anaya-Lara' K. L. Lo' "Multi-task Control for VSC-HVDC Power Management and Frequency Control, " Electronic and Electrical Engineering Department, University of Strathclyde, Glasgow, UK.

[6] Arturs Purvins, Heinz Wilkening, Gianluca Fulli, Evangelos Tzimas, Gianni Celli, Susanna Mocci, Sergio Tedde, “A Eropean supergrid for renewable energy: local impacts and far-reaching challenges” , Jornal of Cleaner Production, 2011.

[7] Shri harsha J, Shilpa G N, Ramesh.E, Dayananda L N, Nataraja.C, “Voltage Source Converter Based HVDC Transmission”, Journal of Engineering Science and Innovative Technology (IJESIT) Volume 1, Issue 1,Septemper 2012.

[8] Bin Wu, “ High-Power Converters and ac Drives”, the Institute of Electrical and Electronics Engineers, 2006.

[9] Tamirue Woldeyesus Shire, “ VSC-HVDC based Network Reinforcement”, M. Sc. Thesis Electrical Power Engineering, May 2009.

[10] Lianxiang Tang, Boon-Teck Ooi, “ Protection of VSC-Multi-Terminal HVDC against DC Faults”, Senior Member, IEEE, McGill University, CANADA,H3A2A7.

[11] Hu Zhaoqing, MAO Chengxiong, Lu Jiming, “ A novel control strategy for VSC based HVDC in multi-machine power systems”, college of Electrical & Electronic Engineering, Huazhong University of Scince and Technology, Wuhan, 430074, China.

Appendix (A)

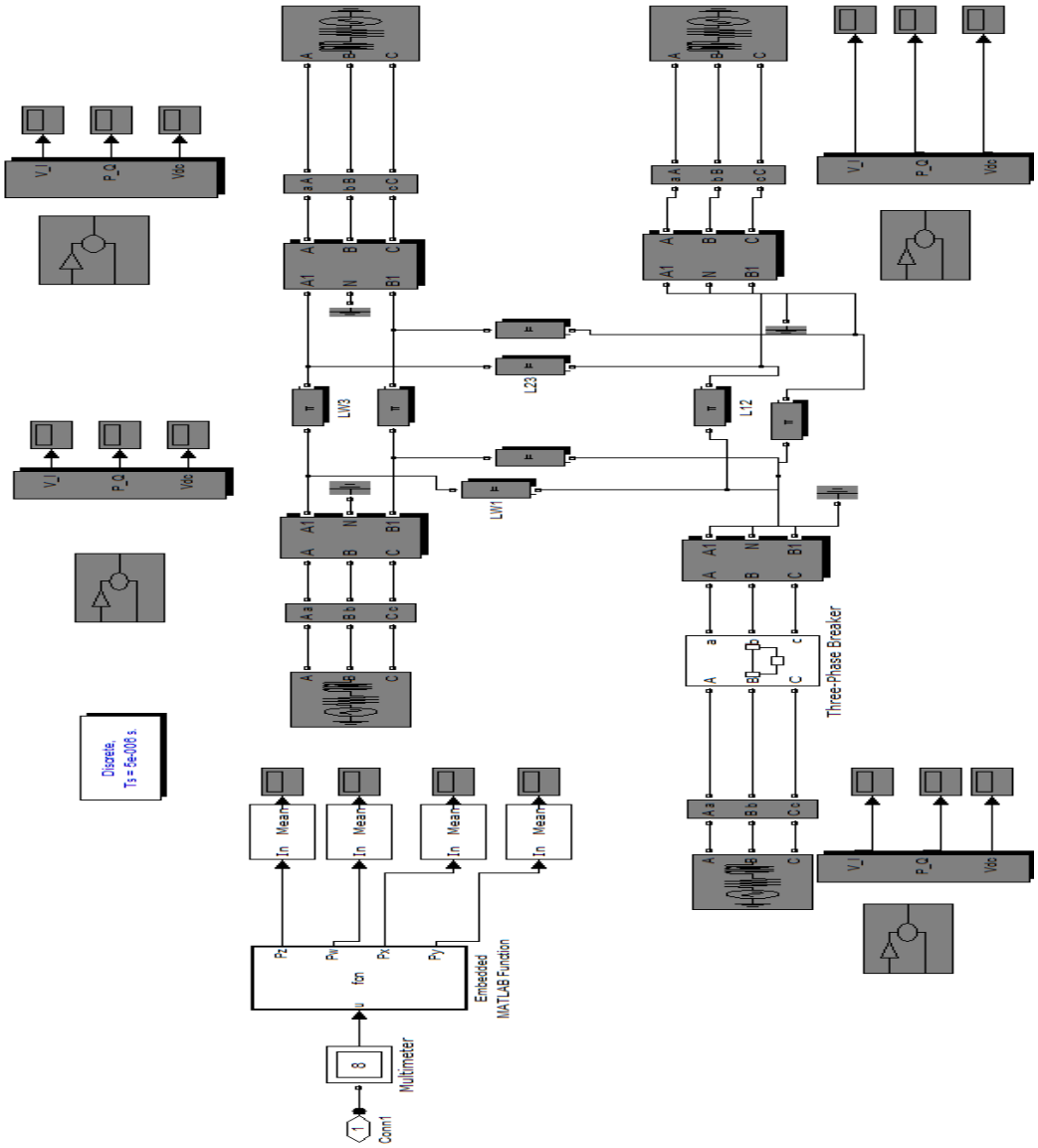
Discrete,
Ts = 5e-006 s.
Multimeter
Conn1
Embedded
MATLAB Function
Mean
In
Pz
Pw
Px
Py
LW3
LW1
L23
L12
Three-Phase Breaker
V_I
P_Q
Vdc

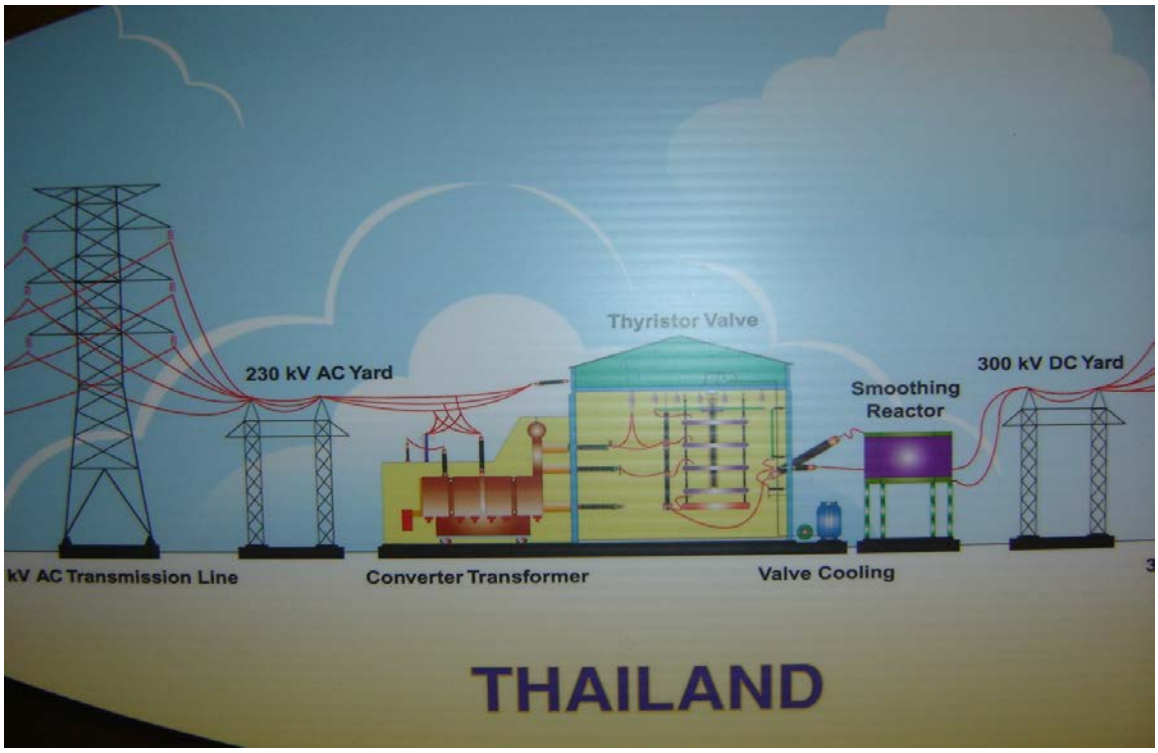

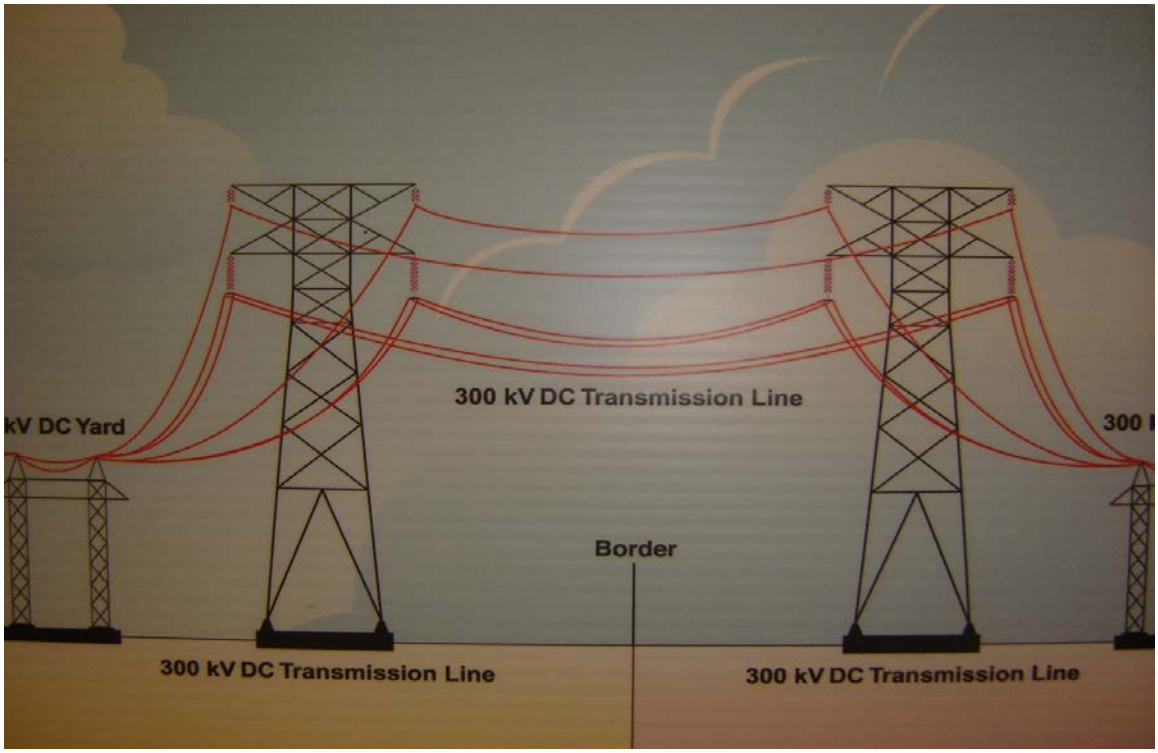

Figure A1&A2: HVDC power station maintenance department at the drain - SS. Parties Hpt. EGAT Public Company Limited (Thailand).

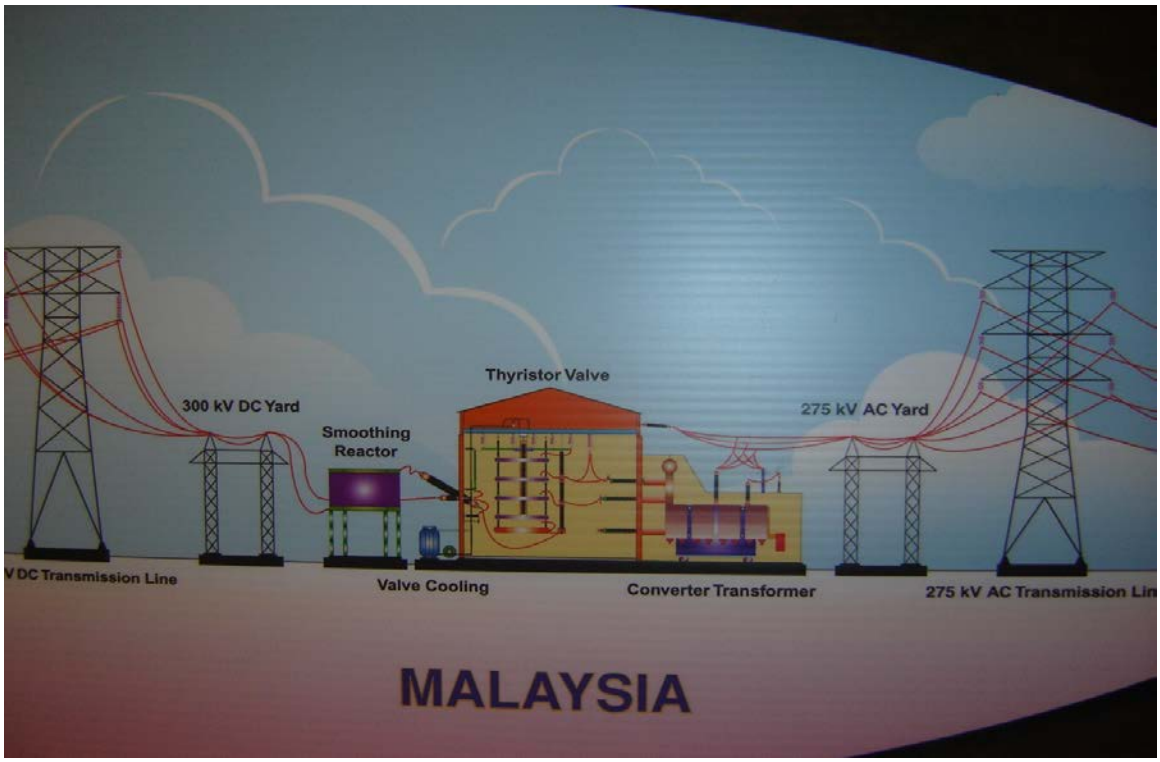

Figure A3: HVDC power station maintenance department at the drain - SS. Parties Hpt. EGAT Public Company Limited (Thailand).

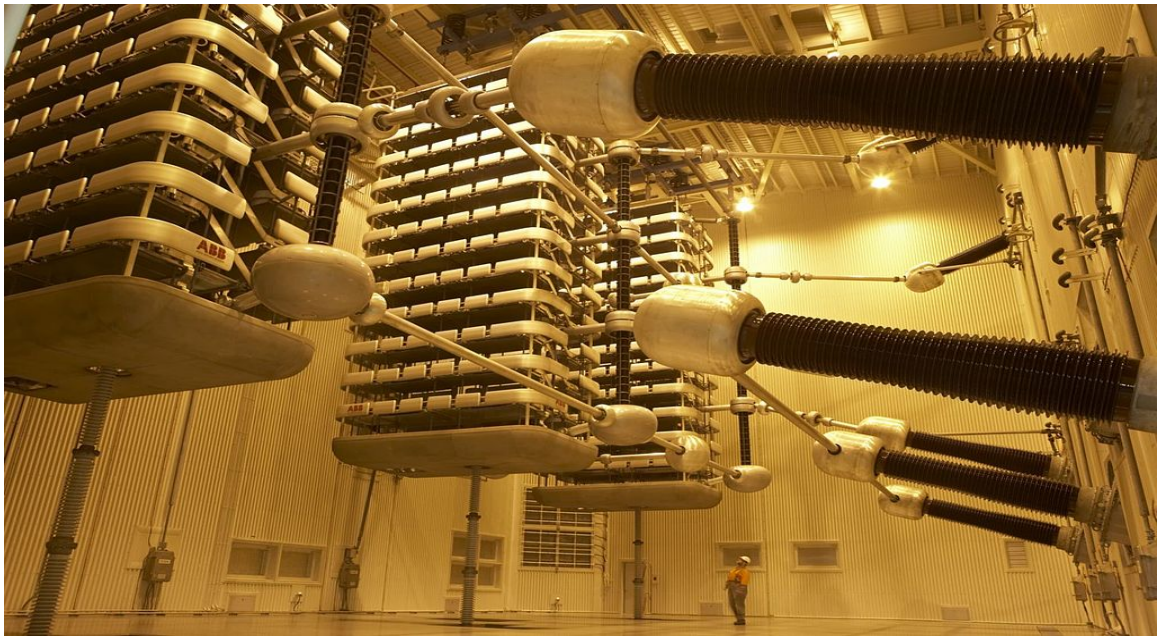

Figure A4: HVDC (Pole 2 thyristor valve hall at Haywords in the New Zealand. HVDC Inter-Island scheme, during a maintenance shutdown.

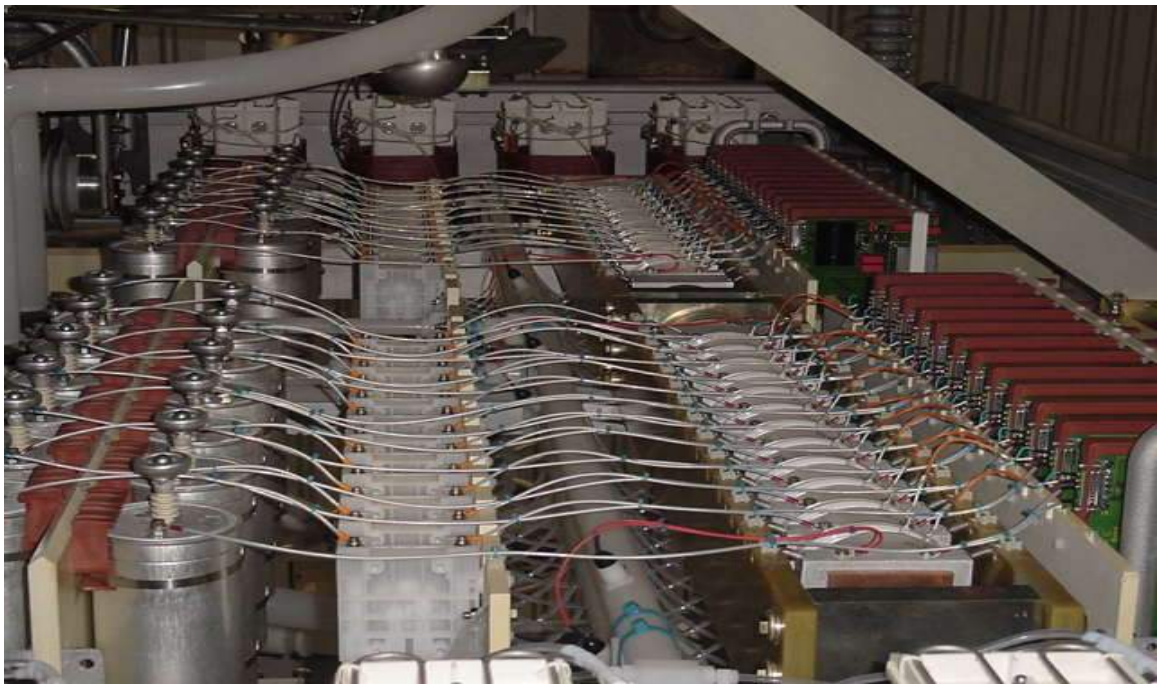

Figure A5: Thyristor design for AC/Dc conversion (Rectifier and Inverter).

DC FILTERS

Figure A6: Limited DC voltage harmonic.

Figure A7: Dc-Transmission line.

The Cable

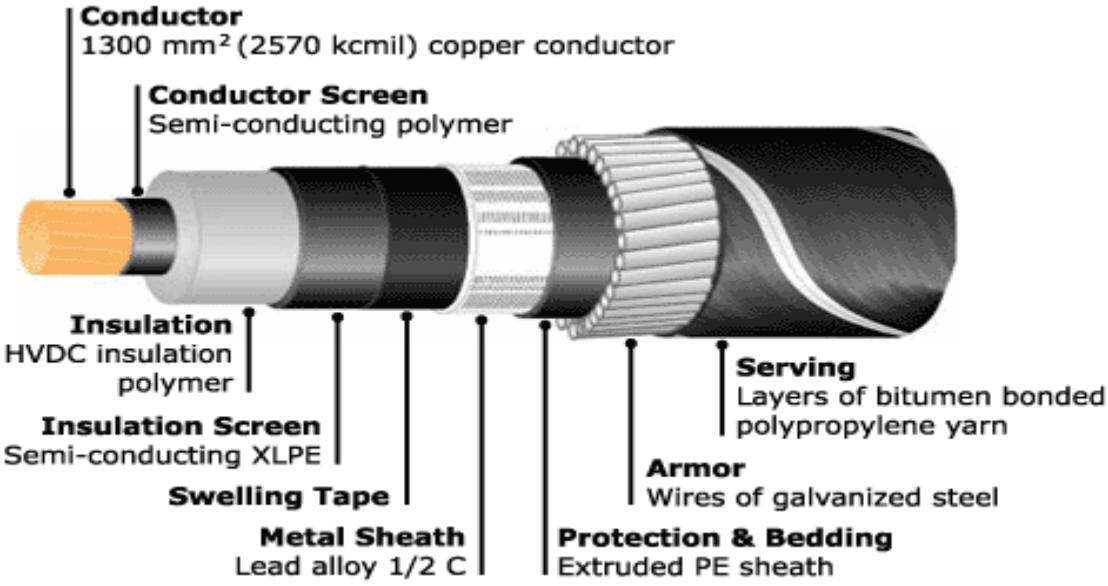

Figure A8: The Cross-Sound cable .

The Cross-Sound cable consists of two power cables and one fiber optic cable that are bundled together.Each power cable is made specifically for Direct Current transfer and its strength and flexibility are ideal for a submarine cable. The cable consists of steel armor and solid flexible plastic to protect and insulate the copper wire. It measure 4.1 inches in diameter and contains no insulating and/or cooling fluids.

Operation

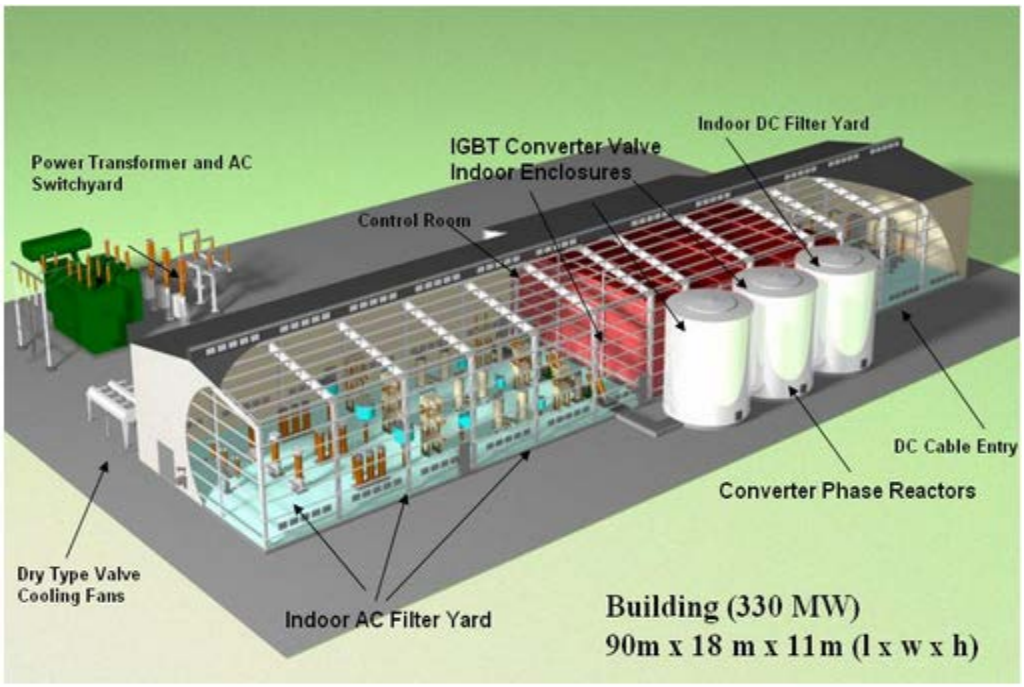

Figure A9: HVDC power station.

A Cross-Sound Cable converter station converts the Alternating Current received from the supplying power grid to Direct Current. The DC power is transferred a cross long island sound and to the other identical converter station. The converter station takes the DC and converts it back to AC for the receiving power grid. The conversion to DC allows for precise control of the power flow in either direction and reduces the required number of cables when compared to more commonly used AC transmission.